P-10195-3
S2646
35772

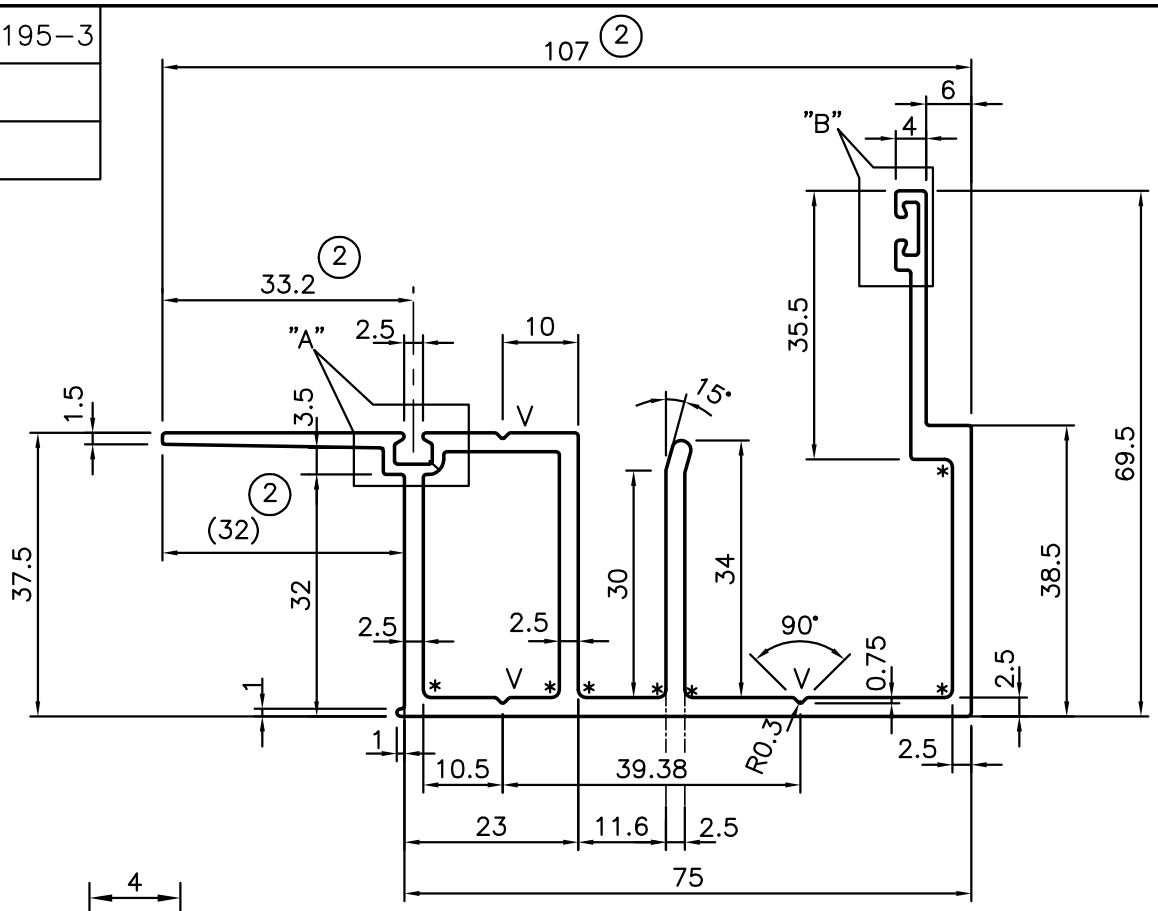

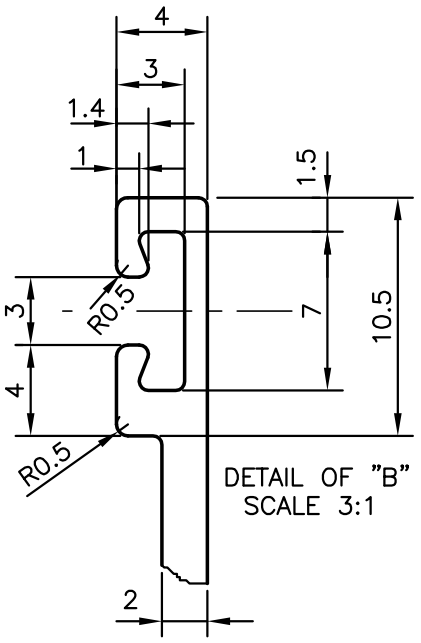

DETAIL OF "B"
SCALE 3:1

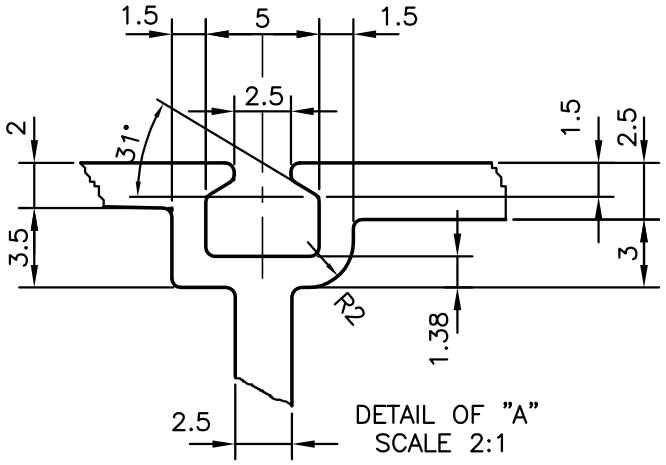

DETAIL OF "A"
SCALE 2:1

(2) ISSUE-2 DIMENSION CHANGED FROM
30.20mm TO 33.20mm
104.00mm TO 107.00mm
& DIMENSION 32.00mm
ADDED FOR CUSTOMER REFERANCE. & WEIGHT ALSO CHANGED FROM 1.956kg/M TO 1.970kg/M

* = 1.0 RADIUS (7 PLACES)
F = FULL RADIUS
V = V GROOVE 0.75x90° (3 PLACES)

			NAME	DATE
JINDAL SYMBOL OF QUALITY AN ISO 9001 COMPANY	JINDAL ALUMINIUM LTD. BANGALORE-560073 (INDIA)	DRAWN	J.P.KAUSHIK	23-10-2010
		CHECKED		
		APPROVED		

1. ALL DIMENSIONS ARE IN mm.
2. ROUND OFF ALL SHARP CORNERS WITH 0.40 mm.
3. TOLERANCES WILL BE AS PER BS:EN-12020-2 UNLESS OTHERWISE SPECIFIED

		SCALE	1:1
		AREA mm^2	729.603
		PERIMETER mm.	527.366
		WEIGHT kg/m	1.970
PARTY'S NAME	GWS ENGINEERS & FABRICATORS PVT.LTD.,MUMBAI	DRAWING No.	SECTION No.
PARTY'S DRAWING No.	GWS-CAPT-A3-09	P-10195-3	-
ALLOY & TEMPER	HE9 WP	S2646	S2646-ISSUE-2
		35772	35772
DESCRIPTION	CURTAIN WALL-MAIL MULLION		