P-11094-1
S3020
35787

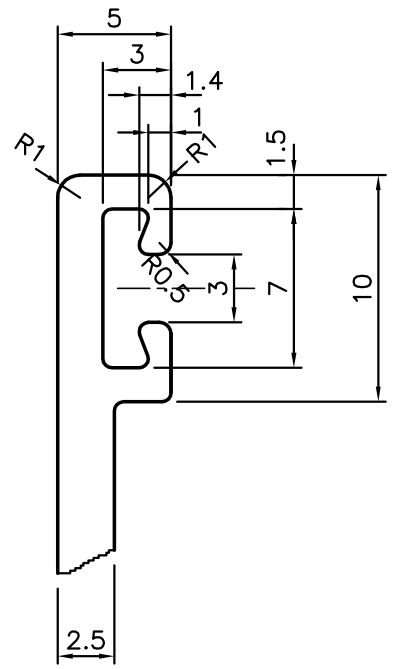

DETAIL OF "B"
SCALE 3:1

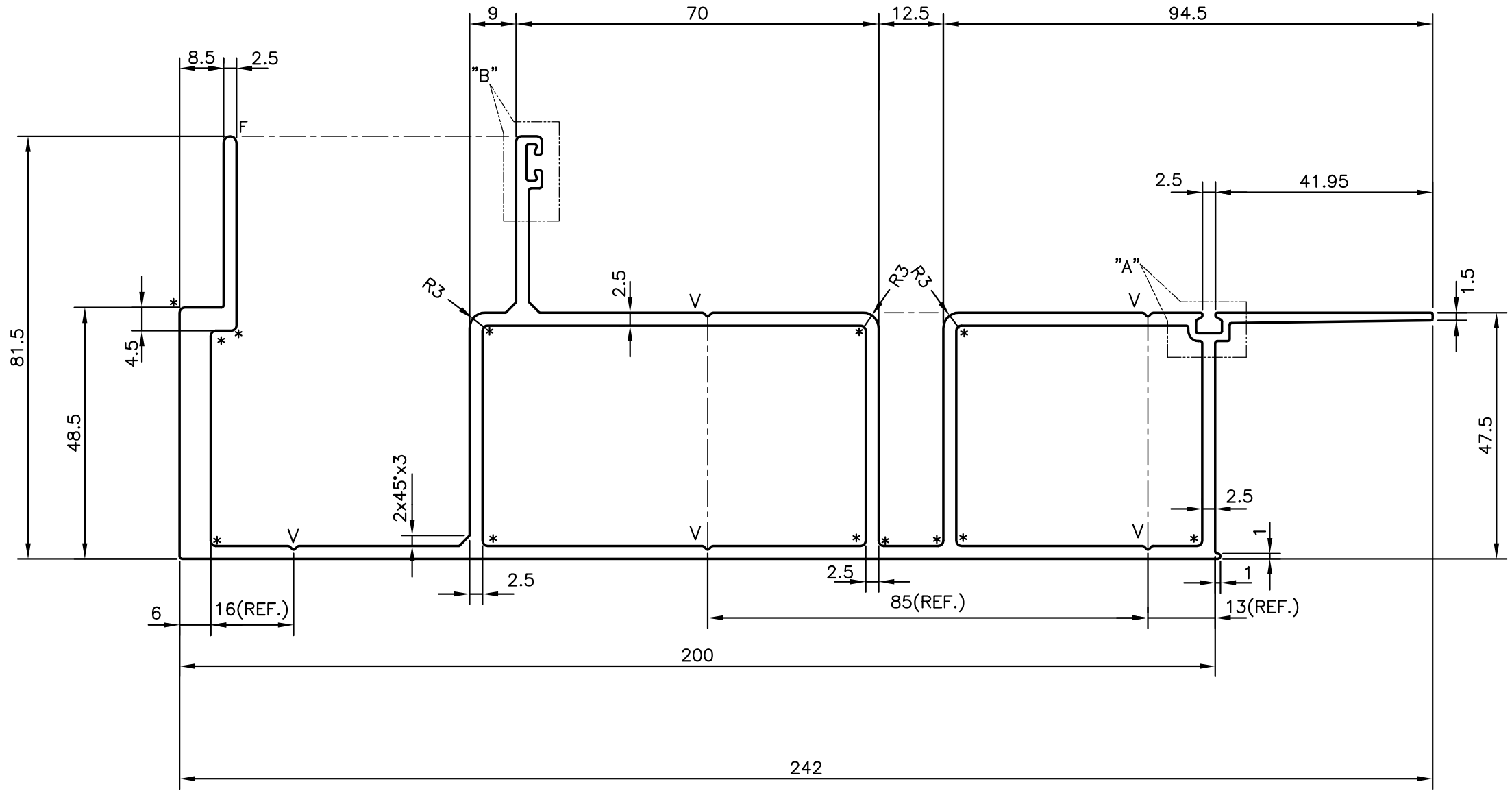

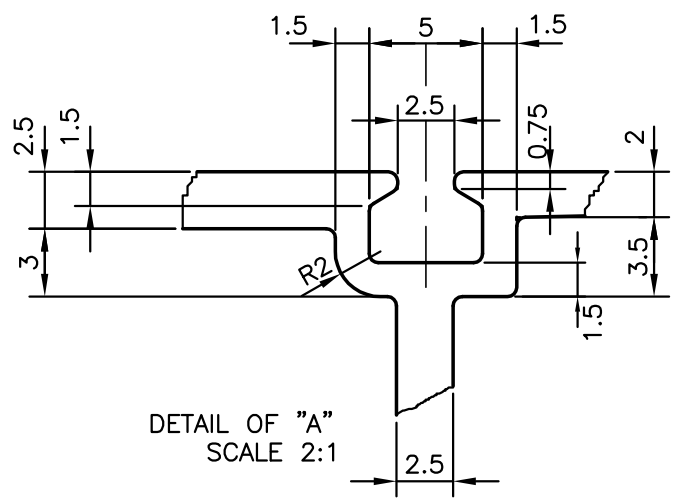

DETAIL OF "A"
SCALE 2:1

F =FULL RADIUS
* = 1.0 RADIUS (4 PLACES)
V = V GROOVE 0.75x90° (5 PLACES)

JINDAL SYMBOL OF QUALITY AN ISO 9001 COMPANY	*JINDAL ALUMINIUM LTD.* *BANGALORE-560073 (INDIA)*		NAME	DATE
		DRAWN	J.P.KAUSHIK	27-07-2011
		CHECKED		
		APPROVED	S.S.GARG	03-08-2011
1. ALL DIMENSIONS ARE IN mm. 2. ROUND OFF ALL SHARP CORNERS WITH 0.40 mm. 3. TOLERANCES WILL BE AS PER BS:EN-755-9 UNLESS OTHERWISE SPECIFIED		SCALE		1:1
		AREA mm^2		1800.766
		PERIMETER mm.		923.627
		WEIGHT kg/m		4.862
PARTY'S NAME	GLASS WALL SYSTEMS (INDIA) PVT. LTD., MUMBAI	DRAWING No.		SECTION No.
PARTY'S DRAWING No.	GWS-CAPT-TERACE-DIE-01	P-11094-1		–
ALLOY & TEMPER	HE9 WP	S3020		S3020
		35787		35787
DESCRIPTION	CURTAIN WALL (MALE SECTION)			