P-11227
S3080
35796

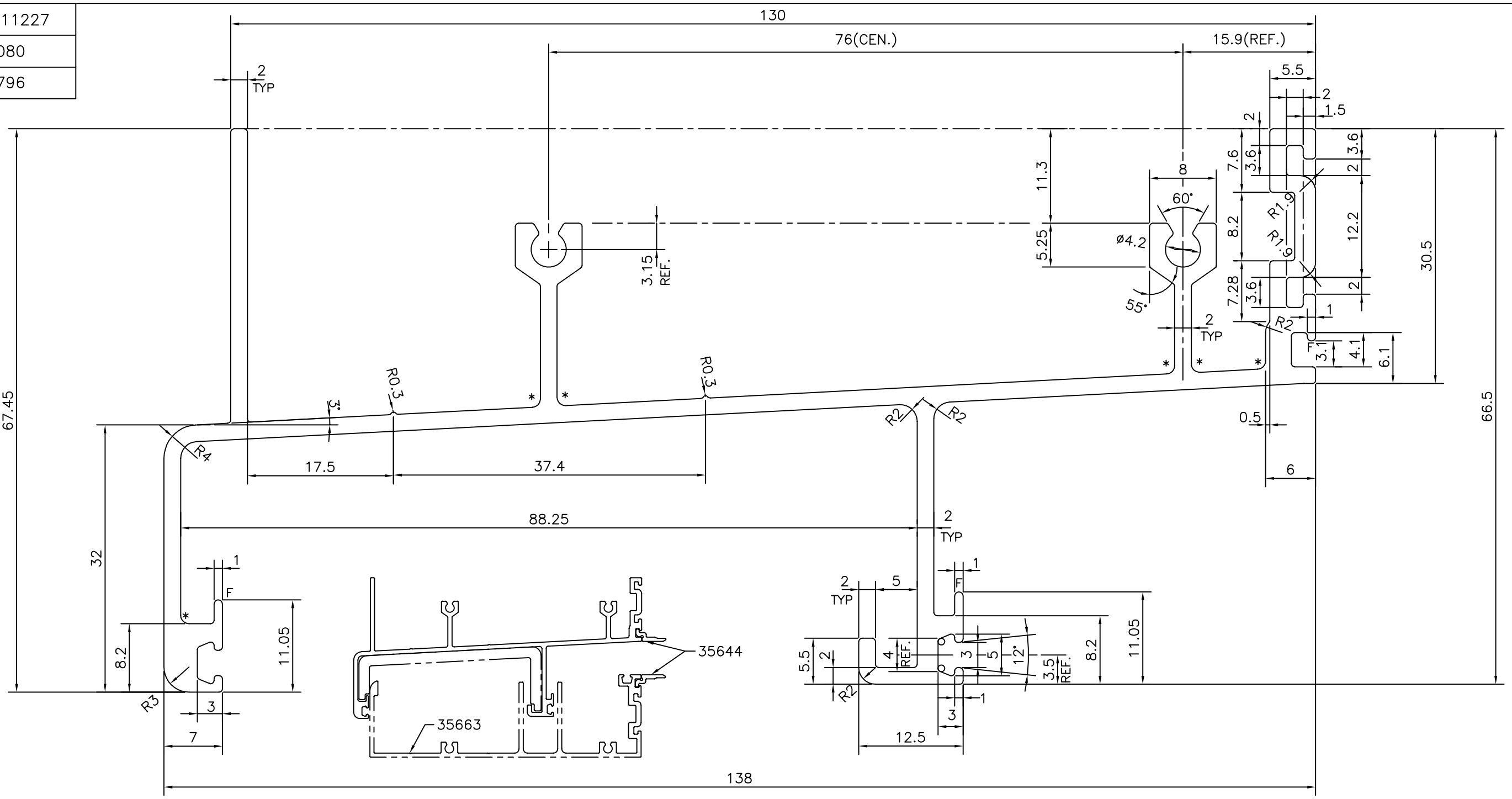

* = 1.0 RADIUS (6 PLACES)
F = FULL RADIUS (3 PLACES)

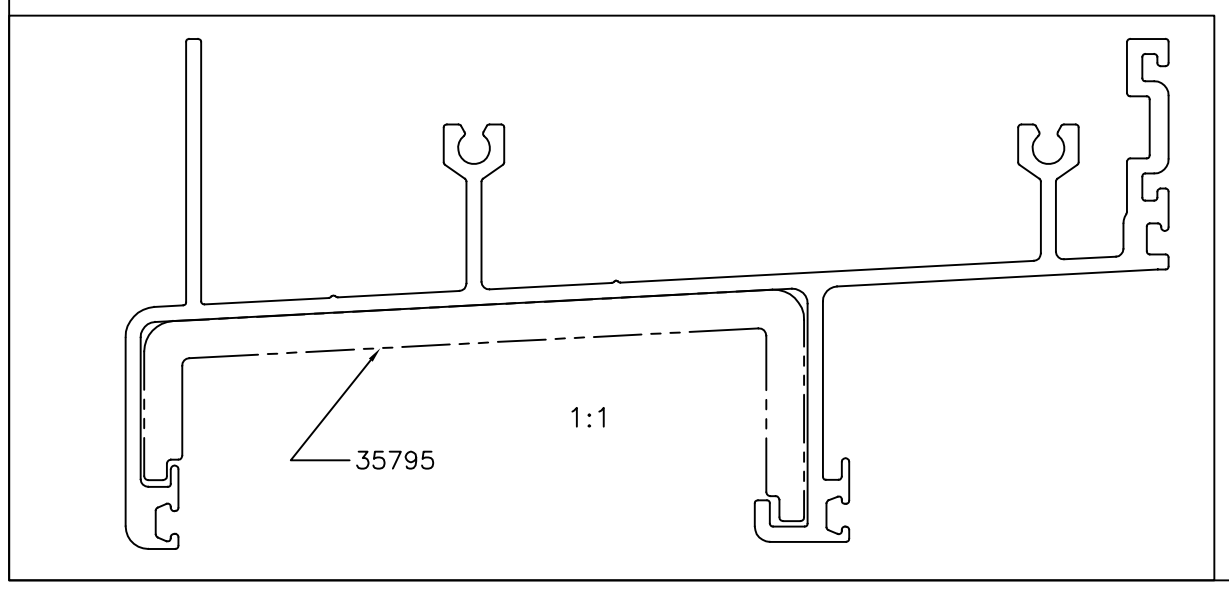

JINDAL
SYMBOL OF QUALITY
AN ISO 9001 COMPANY

JINDAL ALUMINIUM LTD.
BANGALORE-560073 (INDIA)

1. ALL DIMENSIONS ARE IN mm.
2. ROUND OFF ALL SHARP CORNERS WITH 0.40 mm.
3. TOLERANCES WILL BE AS PER BS:EN-755-9 UNLESS OTHERWISE SPECIFIED

		NAME	DATE
DRAWN		J.P.KAUSHIK	23-09-2011
CHECKED			
APPROVED		B.NATARAJ	31-10-2011
SCALE			2:1
AREA mm^2			765.844
PERIMETER mm.			733.245
WEIGHT kg/m			2.068

		DRAWING No.	SECTION No.
PARTY'S NAME	ALUMINIUM UDYOG, MANDI	P-11227	-
PARTY'S DRAWING No.	AS PER 5752	S3080	S3080
ALLOY & TEMPER	63400 WP	35796	35796
DESCRIPTION	CURTAIN WALL SECTION		