P-11547
S3190
35799

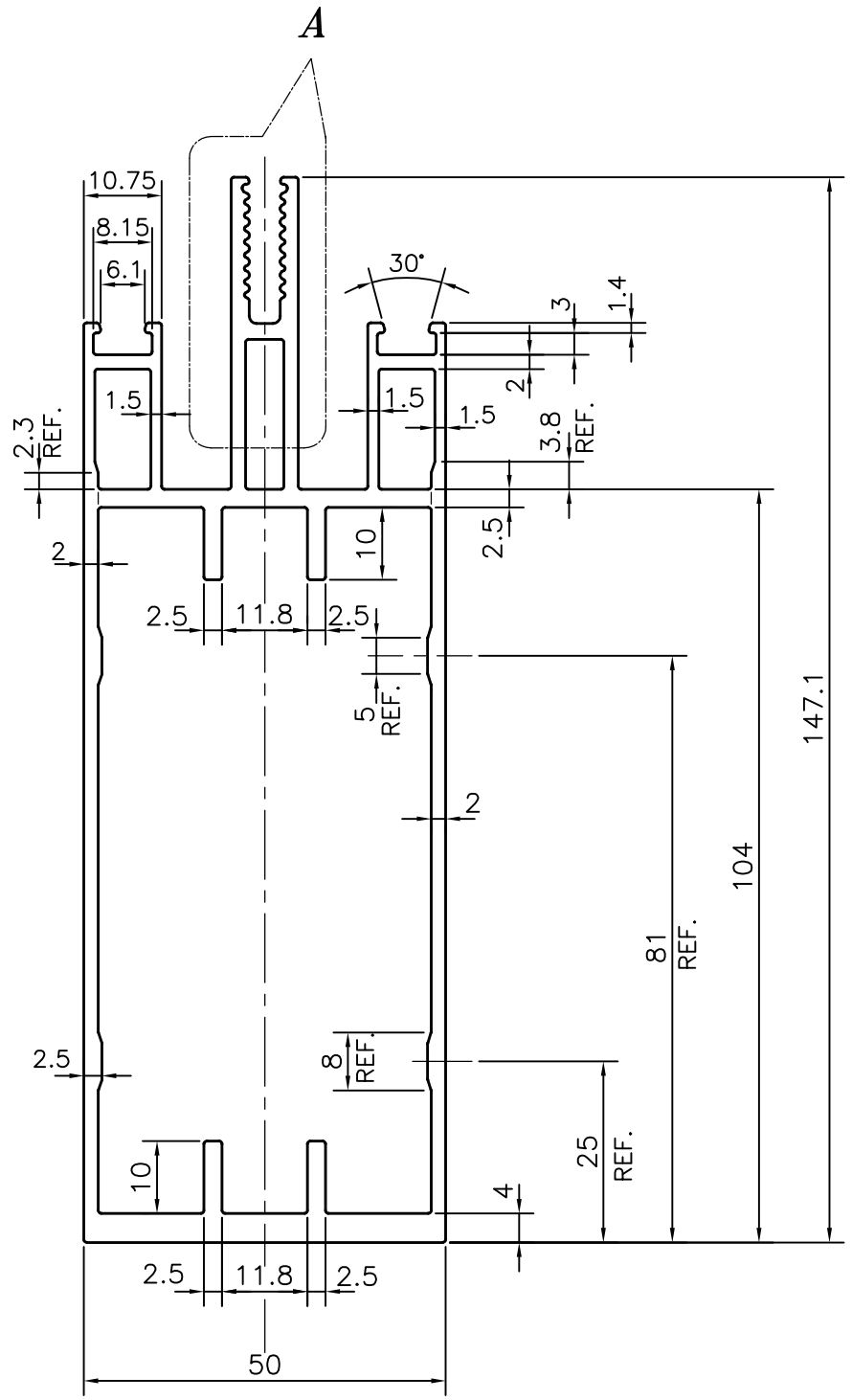

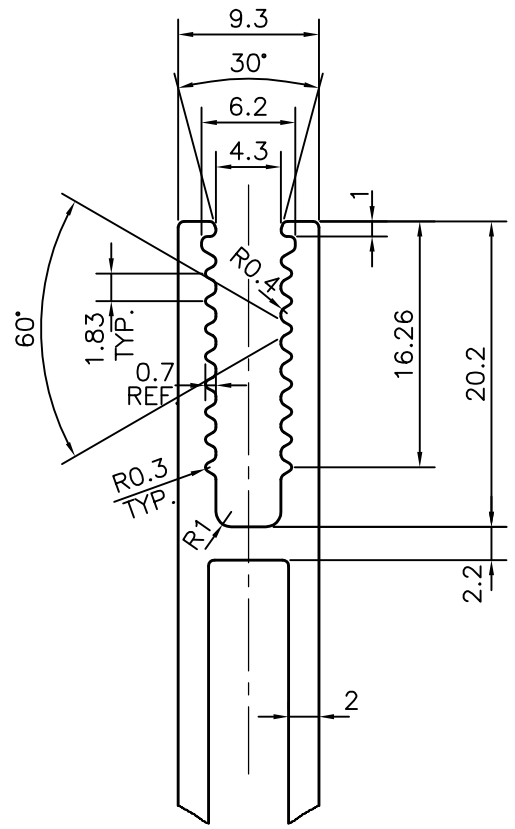

DETAIL OF 'A'

SCALE 2:1

JINDAL SYMBOL OF QUALITY AN ISO 9001 COMPANY	JINDAL ALUMINIUM LTD. BANGALORE-560073 (INDIA)		NAME	DATE
		DRAWN	PARVESH	06-02-2012
		CHECKED		
		APPROVED	S.S. GARG	16-02-2012
1. ALL DIMENSIONS ARE IN mm. 2. ROUND OFF ALL SHARP CORNERS WITH 0.40 mm. 3. TOLERANCES WILL BE AS PER IS:6477-1983 ,UNLESS OTHERWISE SPECIFIED		SCALE		1:1
		AREA mm^2		1196.152
		PERIMETER mm.		558.402
PARTY'S NAME	AJIT INDIA PVT. LTD., THANE	WEIGHT kg/m		3.23
		DRAWING No.		SECTION No.
PARTY'S DRAWING No.	AS PER DRAWING	P-11547		-
ALLOY & TEMPER	HE9 WP	S3190		S3190
		35799		35799
DESCRIPTION	CURTAIN WALL SECTION			