P–13227
S3979
35891

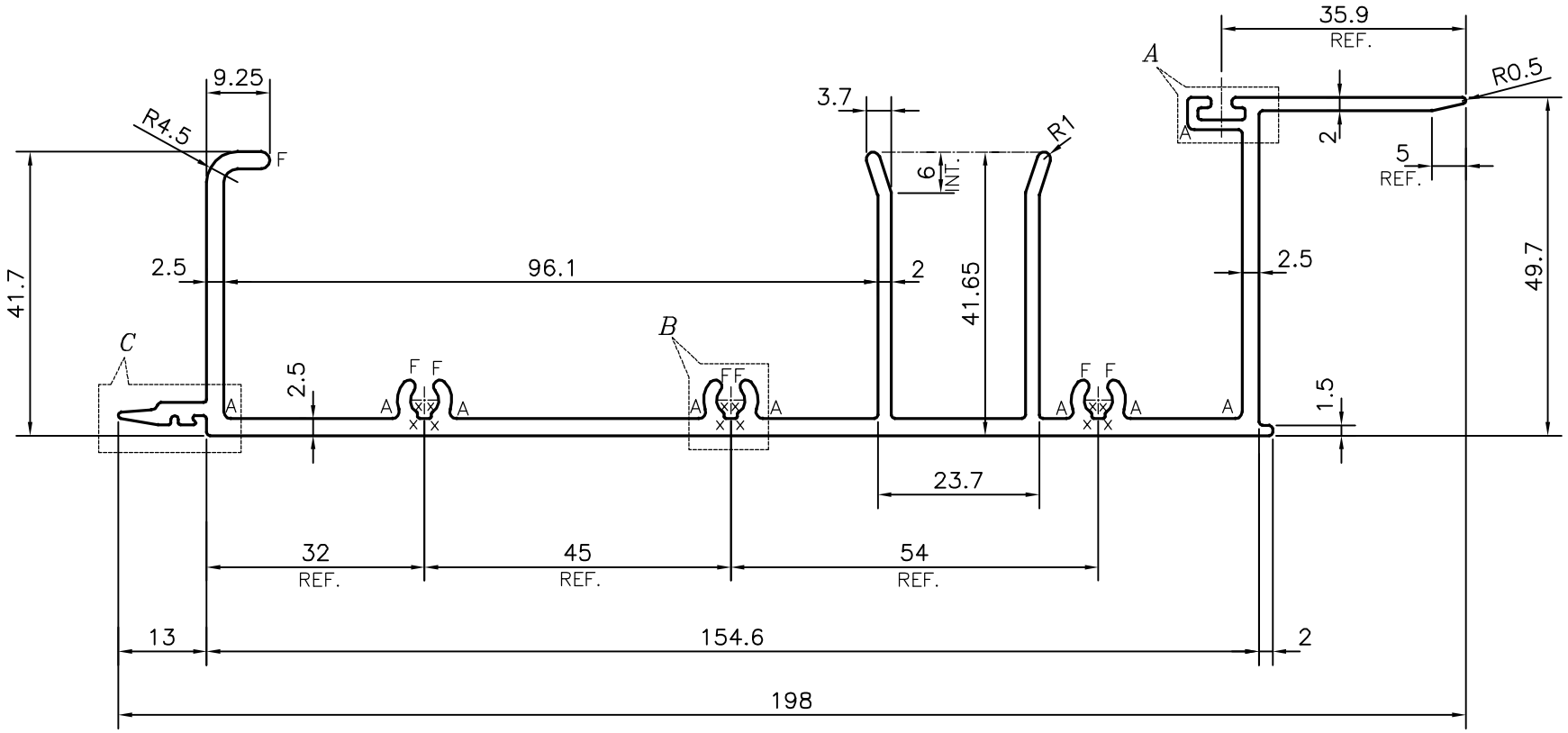

A = RADIUS 1 mm. (10 PLACES)
X = RADIUS 0.3 mm. (16 PLACES)
F = FULL RADIUS (7 PLACES)

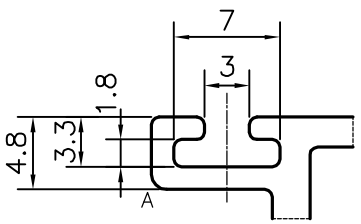

DETAIL OF "A"
SCALE 2:1

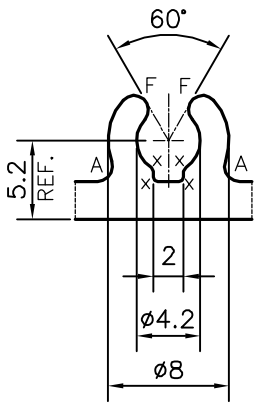

DETAIL OF "B"
SCALE 2:1

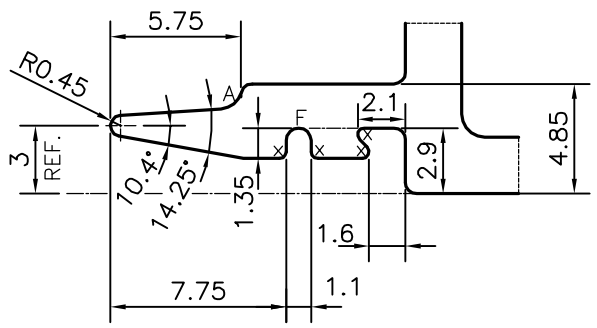

DETAIL OF "C"
SCALE 3:1

TOLERANCES ON OVERALL WIDTHS & WIDTHS ACROSS FLATS OF BARS, & REGULAR SECTIONS

UPTO 6.40mm – ±0.20	UPTO 32.0mm – ±0.38	UPTO 120.0mm – ±0.85	1. STRAIGHTNESS=0.7mm/M
UPTO 10.0mm – ±0.23	UPTO 50.0mm – ±0.46	UPTO 160.0mm – ±1.02	2. TWIST=0.7mm/M
UPTO 12.0mm – ±0.25	UPTO 60.0mm – ±0.53	UPTO 200.0mm – ±1.14	3. ANGULARITY= ±1°
UPTO 16.0mm – ±0.28	UPTO 80.0mm – ±0.69	UPTO 250.0mm – ±1.40	4. FLATNESS =0.005xWIDTH
UPTO 25.0mm – ±0.30	UPTO 100.0mm – ±0.75	UPTO 300.0mm – ±1.65	

JINDAL
SYMBOL OF QUALITY
AN ISO 9001 COMPANY

JINDAL ALUMINIUM LTD.
BANGALORE–560073 (INDIA)

1. ALL DIMENSIONS ARE IN mm.
2. ROUND OFF ALL SHARP CORNERS WITH 0.50 mm.
3. TOLERANCES WILL BE AS PER IS:3965–1981 , UNLESS OTHERWISE SPECIFIED

		NAME	DATE
DRAWN		*PARVESH*	04–12–2013
CHECKED			
APPROVED		S.S.GARG	08–01–2014
SCALE			1:1
AREA mm^2			955.793
PERIMETER mm.			829.769
WEIGHT kg/m			2.581

PARTY'S NAME	AAR AAR ENTERPRISES, NEW DELHI
PARTY'S DRAWING No.	SECTION No.–004
ALLOY & TEMPER	6063 T6
DESCRIPTION	CURTAIN WALL SECTION

DRAWING No.	SECTION No.
P–13227	–
S3979	S3979
35891	35891