P–13474
S4075
35903

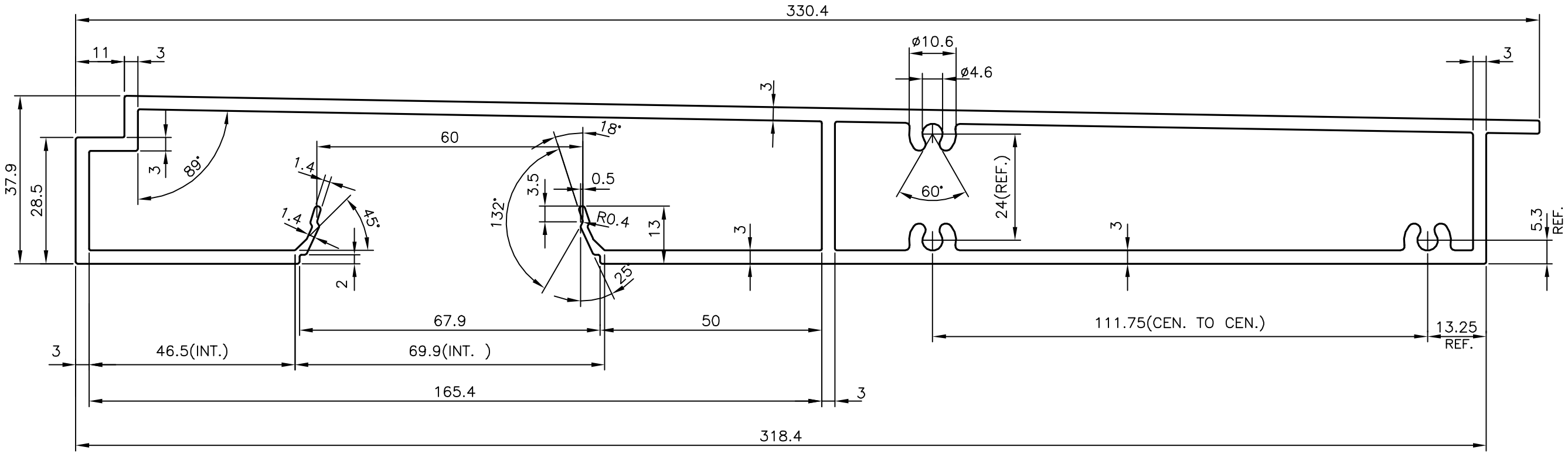

100% MANUAL CORRECTION REQUIRED TO MAINTAIN THE SHAPE AFTER EXTRUSION.

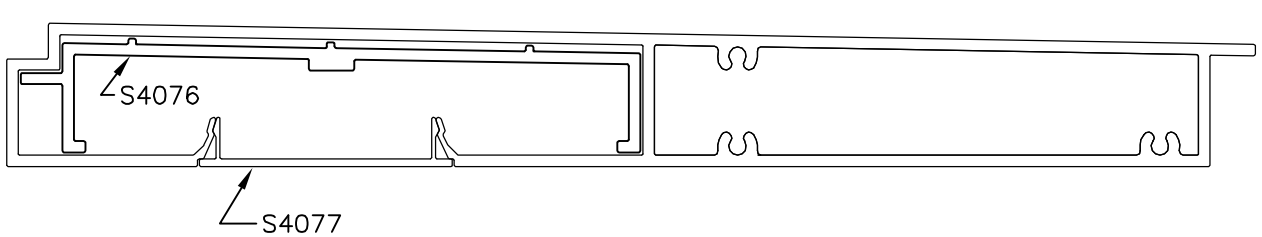

JINDAL SYMBOL OF QUALITY AN ISO 9001 COMPANY	*JINDAL ALUMINIUM LTD.* *BANGALORE–560073 (INDIA)*		NAME	DATE
		DRAWN	J.P.KAUSHIK	20–03–2014
		CHECKED		
		APPROVED	S.S.GARG	14–04–2014
1. ALL DIMENSIONS ARE IN mm. 2. ROUND OFF ALL SHARP CORNERS WITH 0.40 mm. 3. TOLERANCES WILL BE AS PER IS:6477–1983 UNLESS OTHERWISE SPECIFIED		SCALE		1:1
		AREA mm^2		2157.373
		PERIMETER mm.		1037.748
		WEIGHT kg/m		5.825
PARTY'S NAME	ALUFIT (INDIA) PRIVATE LIMITED, BANGALORE	DRAWING No.		SECTION No.
PARTY'S DRAWING No.	AS PER DRAWING	P–13474		–
ALLOY & TEMPER	HE9 WP	S4075		S4075
		35903		35903
DESCRIPTION	HEAD TRANSOM SECTION			