P-13608
S4129
35927

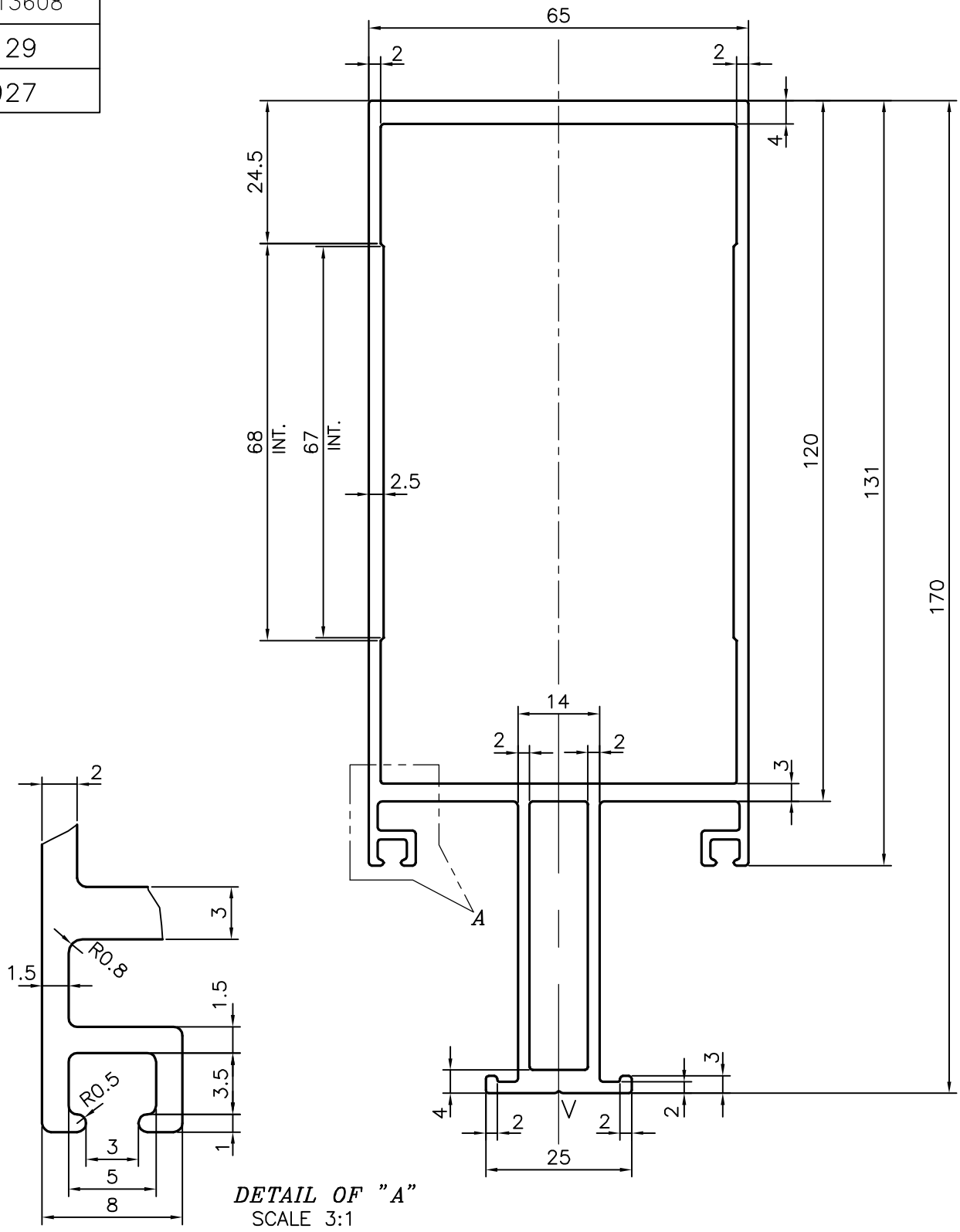

V =V GROOVE 0.4x90°

JINDAL SYMBOL OF QUALITY AN ISO 9002 COMPANY	*JINDAL ALUMINIUM LTD.* *BANGALORE-560073 (INDIA)*		NAME	DATE
		DRAWN	J.P.KAUSHIK	24-05-2014
		CHECKED		
		APPROVED	S.S.GARG	31-05-2014

1. ALL DIMENSIONS ARE IN mm.
2. ROUND OFF ALL SHARP CORNERS WITH 0.50 mm.
3. TOLERANCES WILL BE AS PER IS:6477-1983 UNLESS OTHERWISE SPECIFIED

SCALE	1:1
AREA mm^2	1310.714
PERIMETER mm.	583.335
WEIGHT kg/m	3.539

PARTY'S NAME	HATIM GLAZING & CLADDING PVT. LTD., MUMBAI
PARTY'S DRAWING No.	AS PER DRAWING (BIG MULLION)
ALLOY & TEMPER	6063 T6
DESCRIPTION	CURTAIN WALL SECTION (MULLION)

DRAWING No.	SECTION No.
P-13608	–
S4129	S4129
35927	35927