P-13609
S4130
35928

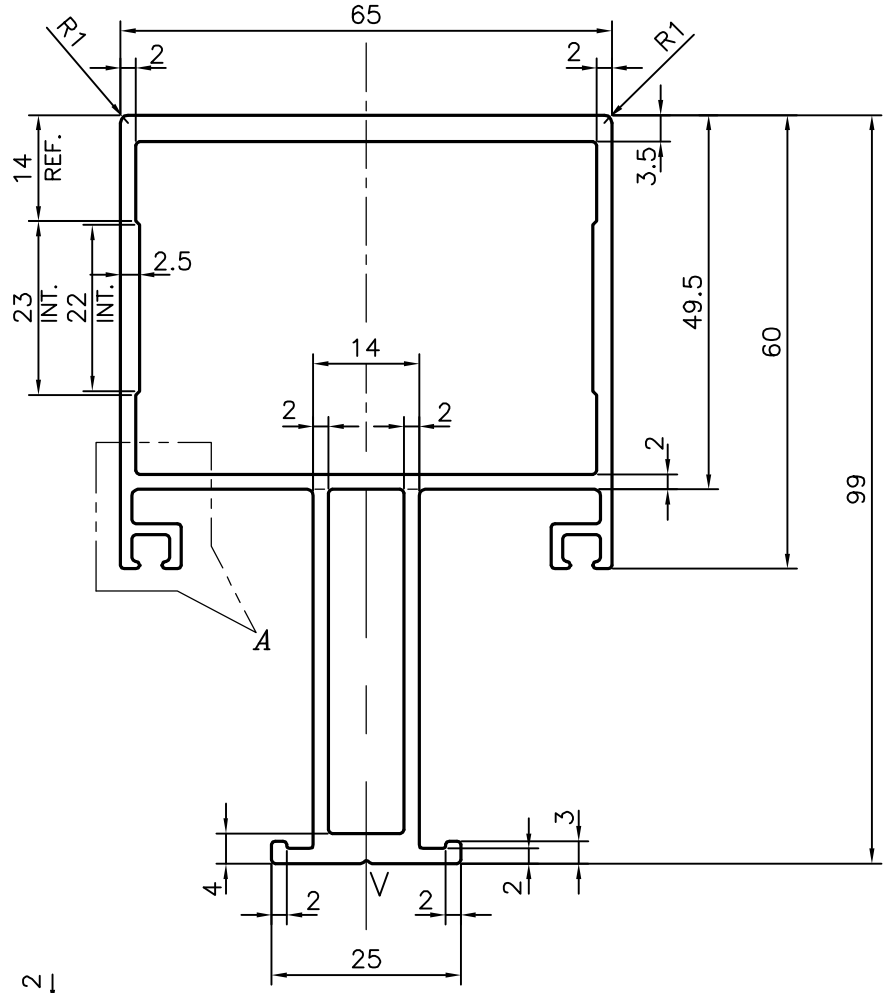

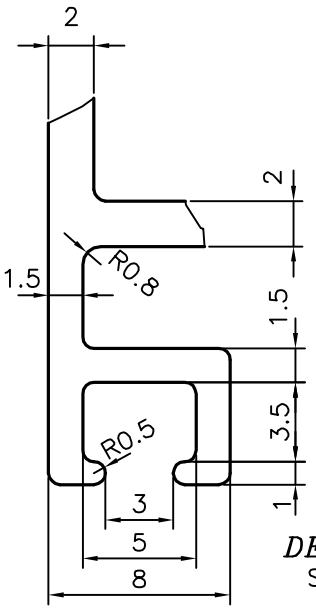

DETAIL OF "A"
SCALE 3:1

V =V GROOVE 0.4x90°

JINDAL SYMBOL OF QUALITY AN ISO 9002 COMPANY	*JINDAL ALUMINIUM LTD.* *BANGALORE-560073 (INDIA)*		NAME	DATE
		DRAWN	J.P.KAUSHIK	24-05-2014
		CHECKED		
		APPROVED	S.S.GARG	31-05-2014

1. ALL DIMENSIONS ARE IN mm.
2. ROUND OFF ALL SHARP CORNERS WITH 0.50 mm.
3. TOLERANCES WILL BE AS PER IS:6477-1983 UNLESS OTHERWISE SPECIFIED

SCALE	1:1
AREA mm^2	888.393
PERIMETER mm.	438.906
WEIGHT kg/m	2.399

PARTY'S NAME	HATIM GLAZING & CLADDING PVT. LTD., MUMBAI
PARTY'S DRAWING No.	AS PER DRAWING (SMALL MULLION)
ALLOY & TEMPER	6063 T6
DESCRIPTION	CURTAIN WALL SECTION (MULLION)

DRAWING No.	SECTION No.
P-13609	–
S4130	S4130
35928	35928