P–13855
S4195
35939

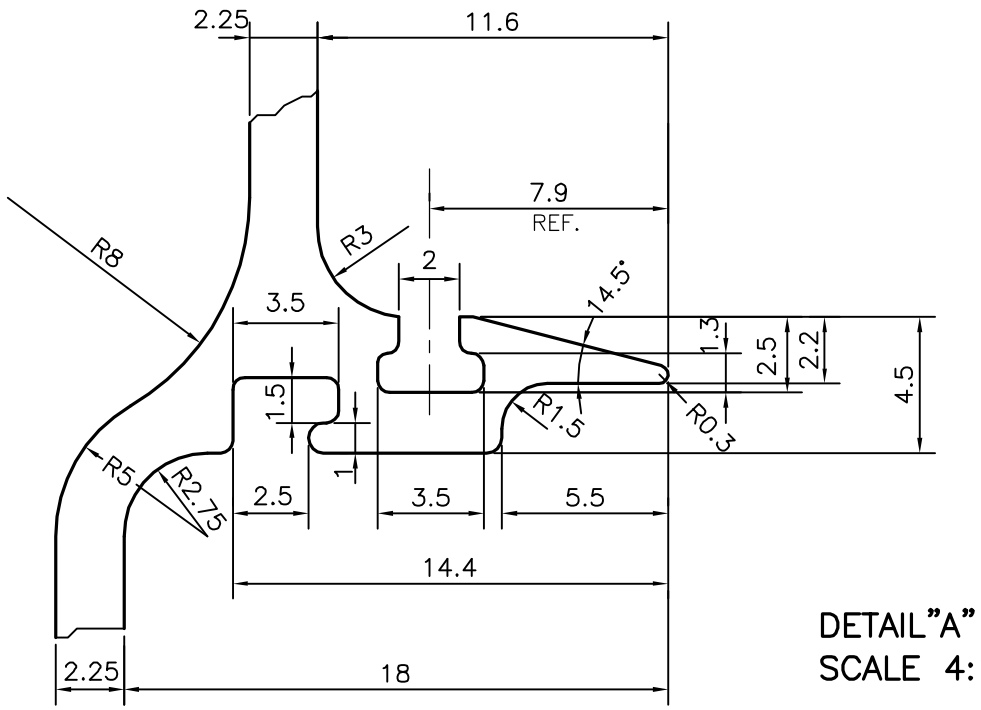

DETAIL"A"
SCALE 4:1

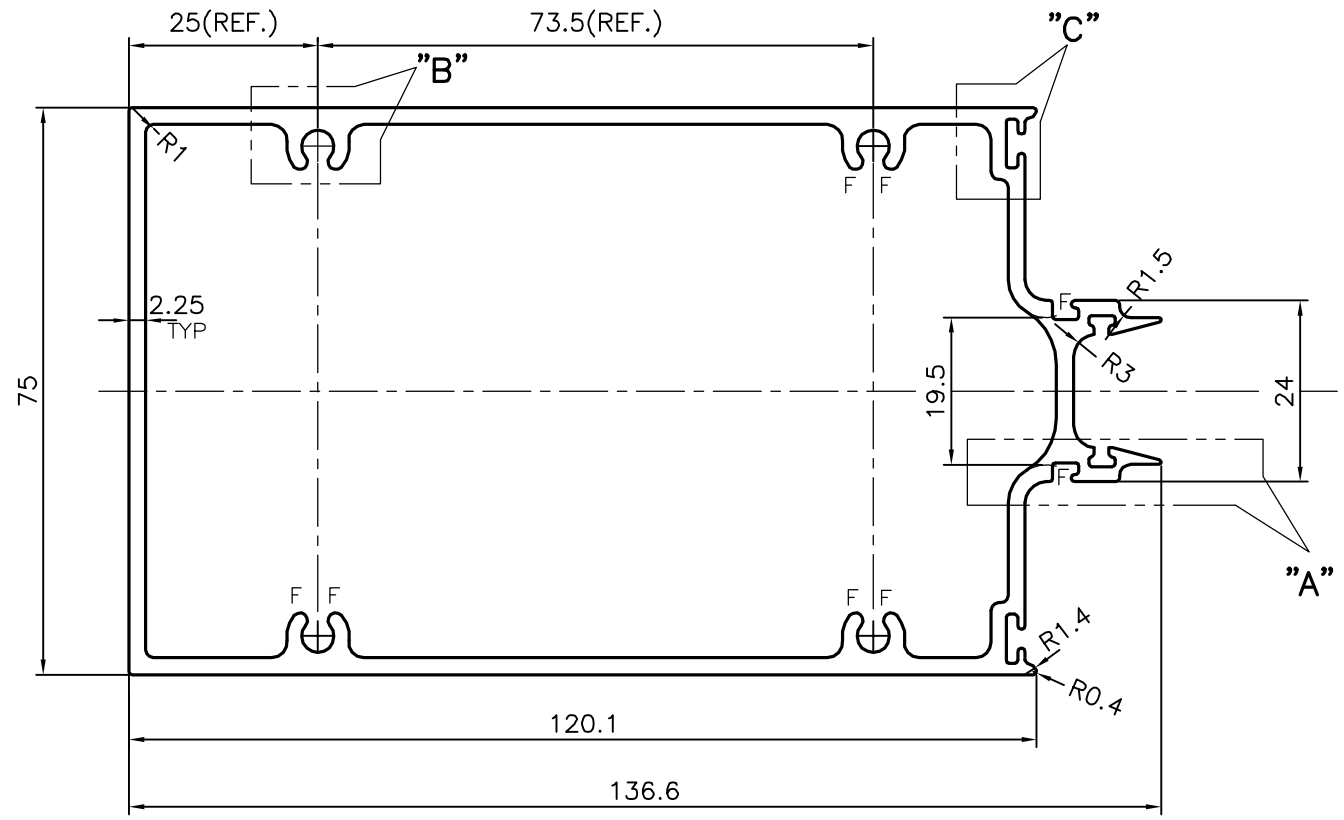

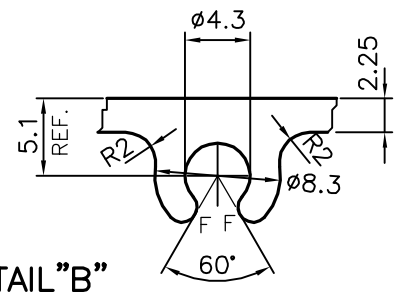

DETAIL"B"
SCALE 2:1

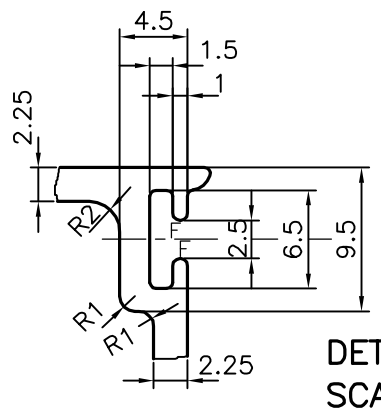

DETAIL"C"
SCALE 2:1

F = FULL RADIUS (14 PLACES)

			NAME	DATE
SYMBOL OF QUALITY AN ISO 9001 COMPANY	*JINDAL ALUMINIUM LTD.* *BANGALORE–560073 (INDIA)*	DRAWN	*J.P.KAUSHIK*	05–08–2014
		CHECKED		
		APPROVED	S.S.GARG	08–08–2014

1. ALL DIMENSIONS ARE IN mm.
2. ROUND OFF ALL SHARP CORNERS WITH 0.40 mm.
3. TOLERANCES WILL BE AS PER IS:6477–1983, UNLESS OTHERWISE SPECIFIED

		SCALE	1:1
		AREA mm^2	1061.523
		PERIMETER mm.	489.058
		WEIGHT kg/m	2.866
PARTY'S NAME	INNOVATIVE AL–METAL INDUSTRIES,BANGALORE	DRAWING No.	SECTION No.
PARTY'S DRAWING No.	AS PER DRAWING	P–13855	–
ALLOY & TEMPER	HE9 WP	S4195	S4195
DESCRIPTION	CURTAIN WALL SECTION–MID TRANSOM	35939	35939