P–13856
S4196
35940

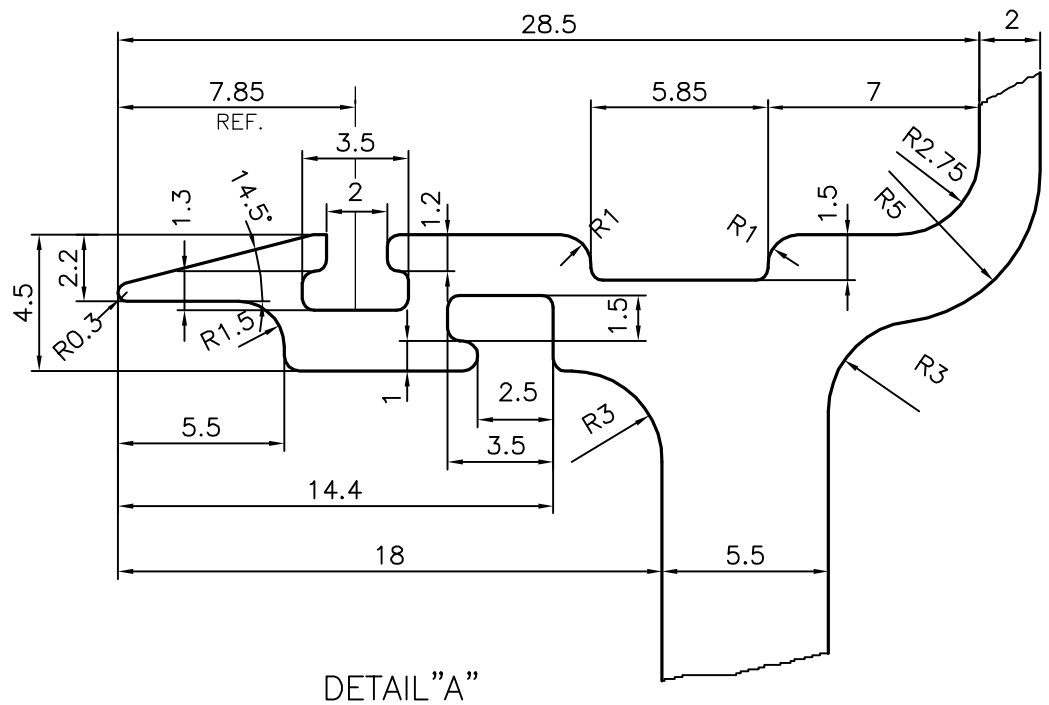

DETAIL"A"
SCALE 4:1

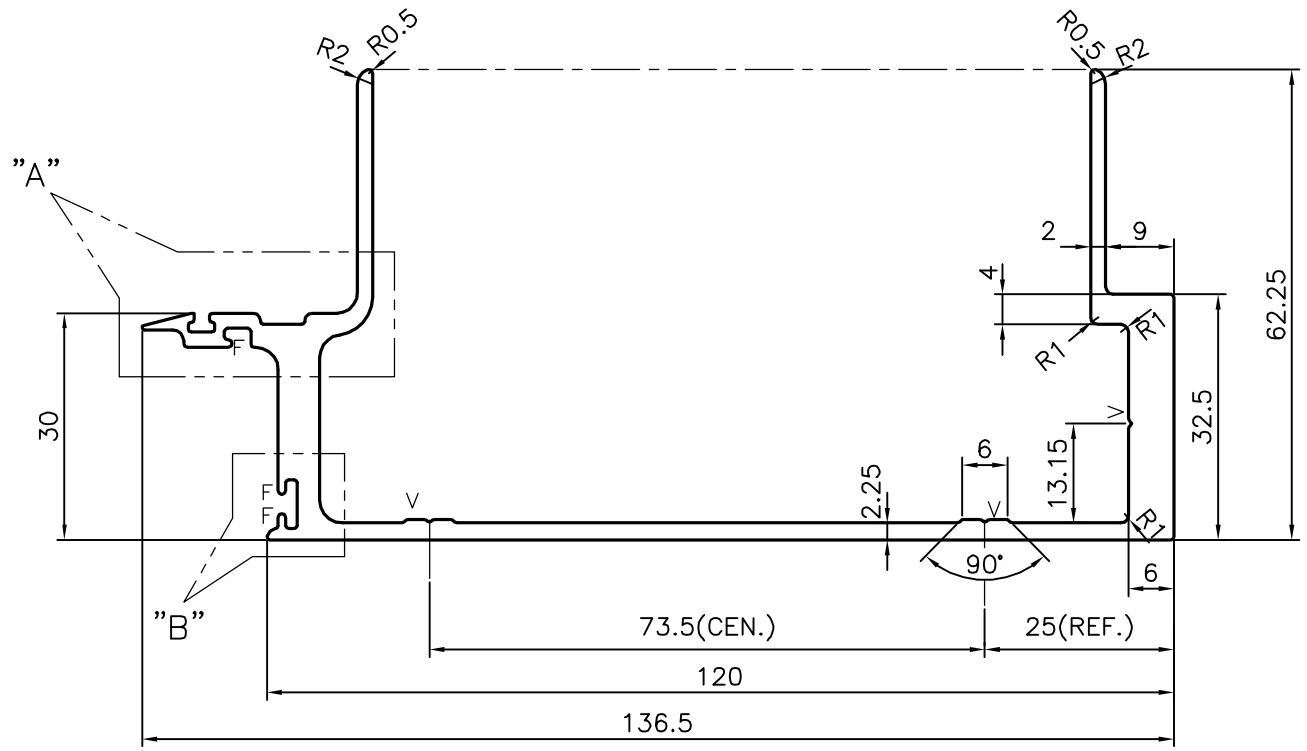

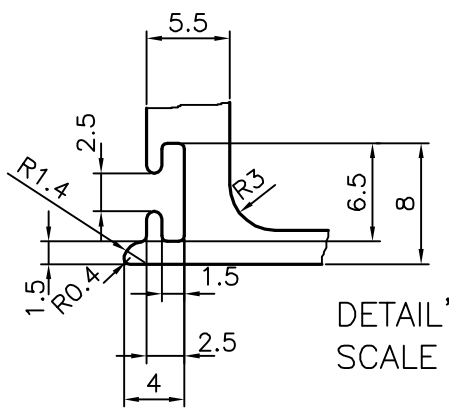

DETAIL"B"
SCALE 2:1

F = FULL RADIUS (3 PLACES)
V = V GROOVE 0.4x90° (3 PLACES)

JINDAL SYMBOL OF QUALITY AN ISO 9001 COMPANY	*JINDAL ALUMINIUM LTD.* *BANGALORE–560073 (INDIA)*		NAME	DATE
		DRAWN	*J.P.KAUSHIK*	05–08–2014
		CHECKED		
		APPROVED	S.S.GARG	08–08–2014
1. ALL DIMENSIONS ARE IN mm. 2. ROUND OFF ALL SHARP CORNERS WITH 0.40 mm. 3. TOLERANCES WILL BE AS PER IS:3965–1981, UNLESS OTHERWISE SPECIFIED		SCALE		1:1
		AREA mm^2		800.542
		PERIMETER mm.		557.436
		WEIGHT kg/m		2.161
PARTY'S NAME	INNOVATIVE AL–METAL INDUSTRIES,BANGALORE	DRAWING No.		SECTION No.
PARTY'S DRAWING No.	AS PER DRAWING	P–13856		–
ALLOY & TEMPER	HE9 WP	S4196		S4196
		35940		35940
DESCRIPTION	CURTAIN WALL SECTION–MALE MULLION			