P–13858
S4198
35942

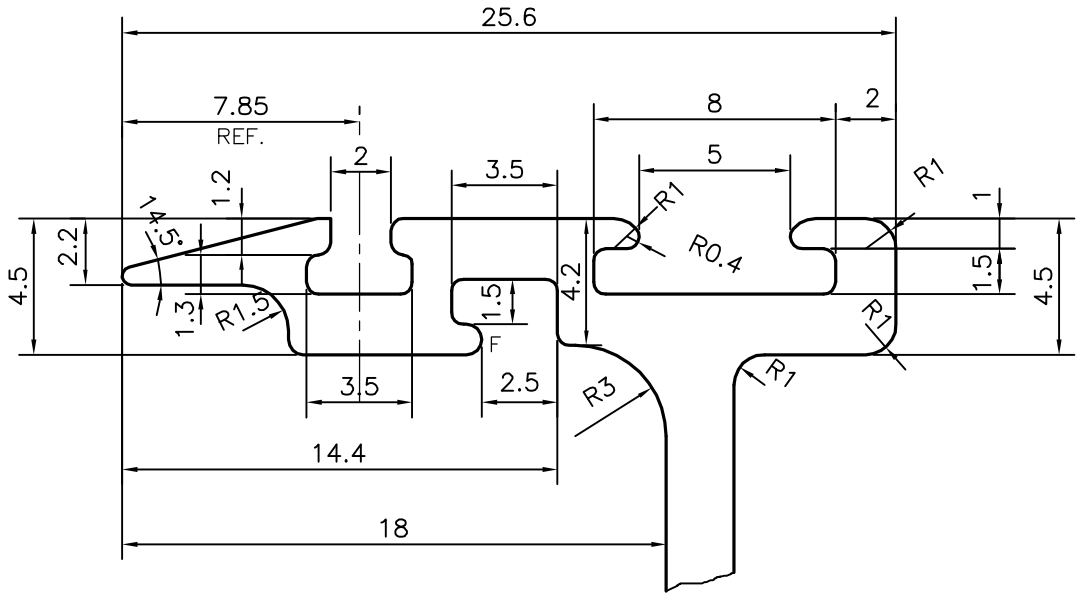

DETAIL"A"
SCALE 4:1

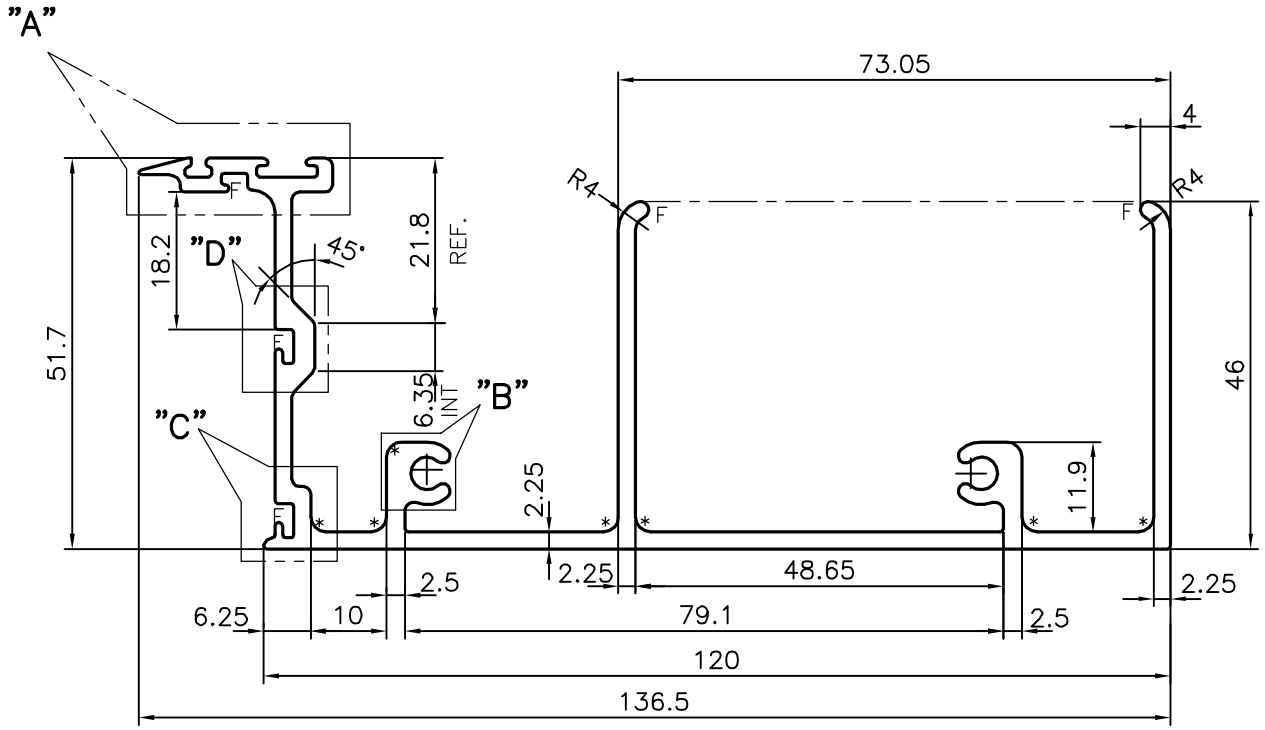

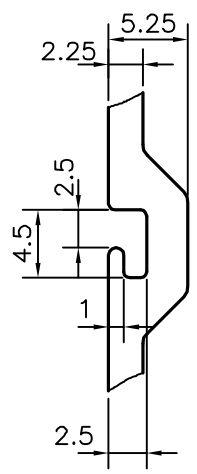

DETAIL"D"
SCALE 2:1

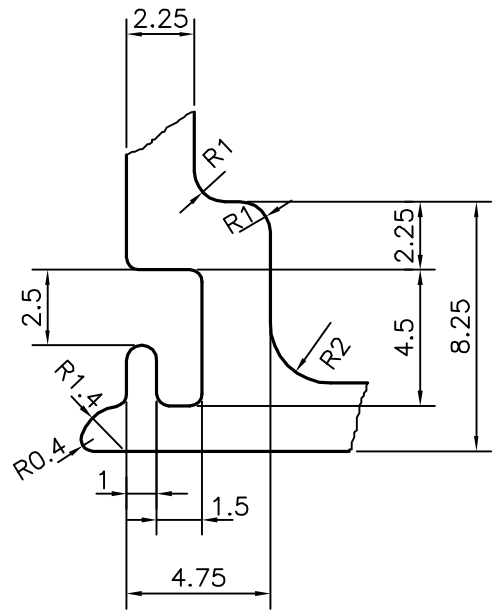

DETAIL"C"
SCALE 4:1

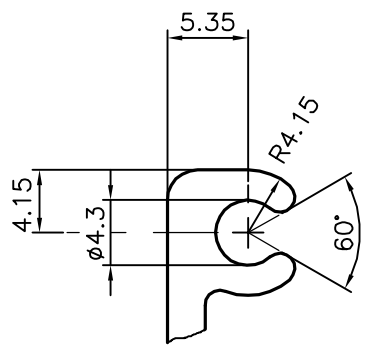

DETAIL"B"
SCALE 2:1

* = 2 RADIUS (7 PLACES)
F = FULL RADIUS (7 PLACES)

			NAME	DATE
JINDAL SYMBOL OF QUALITY AN ISO 9001 COMPANY	*JINDAL ALUMINIUM LTD.* *BANGALORE–560073 (INDIA)*	DRAWN	*J.P.KAUSHIK*	05–08–2014
		CHECKED		
		APPROVED	S.S.GARG	08–08–2014
1. ALL DIMENSIONS ARE IN mm. 2. ROUND OFF ALL SHARP CORNERS WITH 0.40 mm. 3. TOLERANCES WILL BE AS PER IS:3965–1981, UNLESS OTHERWISE SPECIFIED		SCALE		1:1
		AREA mm^2		778.963
		PERIMETER mm.		678.598
PARTY'S NAME	INNOVATIVE AL–METAL INDUSTRIES,BANGALORE	WEIGHT kg/m		2.103
		DRAWING No.		SECTION No.
PARTY'S DRAWING No.	AS PER DRAWING	P–13858		–
		S4198		S4198
ALLOY & TEMPER	HE9 WP	35942		35942
DESCRIPTION	CURTAIN WALL SECTION–FEMALE TRANSOM			