P–13879
S4236
35952

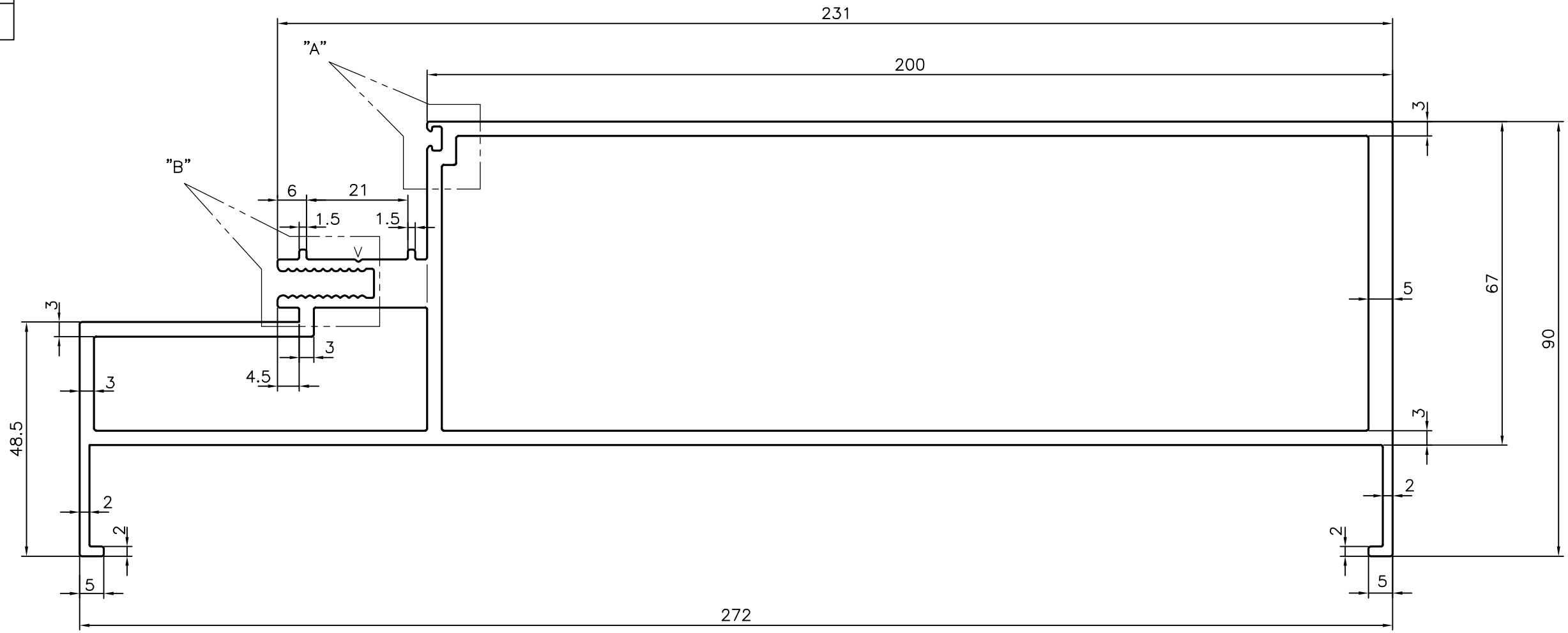

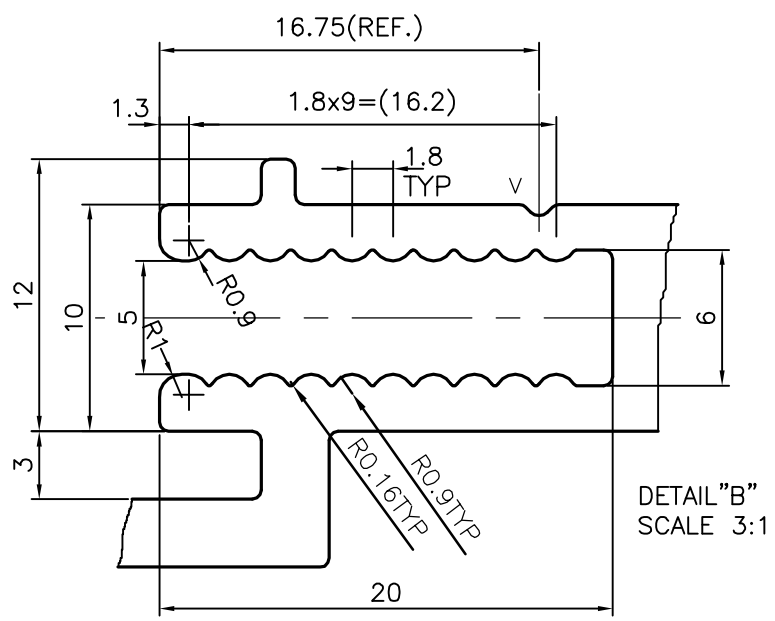

DETAIL"B"
SCALE 3:1

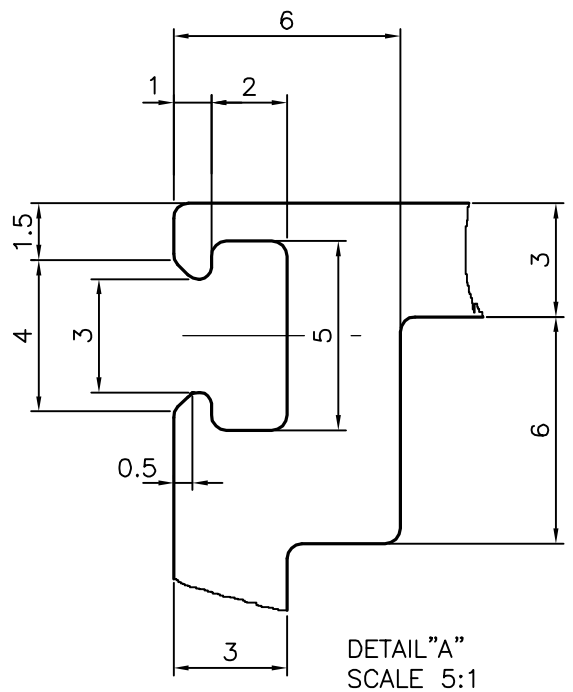

DETAIL"A"
SCALE 5:1

V = V GROOVE 0.5x90°

JINDAL SYMBOL OF QUALITY AN ISO 9001 COMPANY	*JINDAL ALUMINIUM LTD.* *BANGALORE–560073 (INDIA)*		
1. ALL DIMENSIONS ARE IN mm. 2. ROUND OFF ALL SHARP CORNERS WITH 0.40 mm. 3. TOLERANCES WILL BE AS PER IS:6477–1983 UNLESS OTHERWISE SPECIFIED			
PARTY'S NAME	ALUMAYER INDIA PVT. LTD., MUMBAI		
PARTY'S DRAWING No.	NCP–31		
ALLOY & TEMPER	6063 T6		
DESCRIPTION	CURTAIN WALL SECTION		

	NAME	DATE
DRAWN	J.P.KAUSHIK	14–08–2014
CHECKED		
APPROVED	S.S.GARG	11–09–2014
SCALE		1:1
AREA mm^2		2433.401
PERIMETER mm.		850.068
WEIGHT kg/m		6.570

DRAWING No.	SECTION No.
P–13879	–
S4236	S4236
35952	35952