P-14635-1
X1878
35977

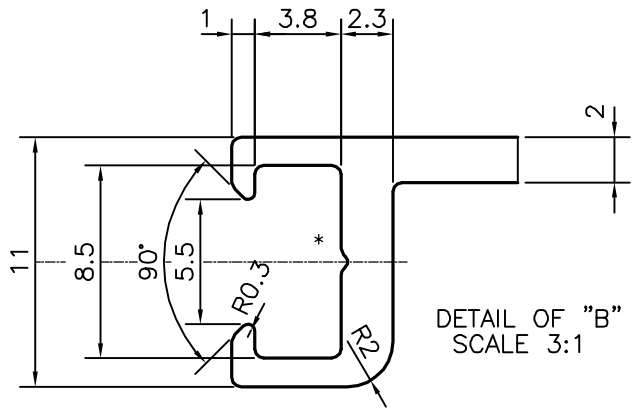

DETAIL OF "B"
SCALE 3:1

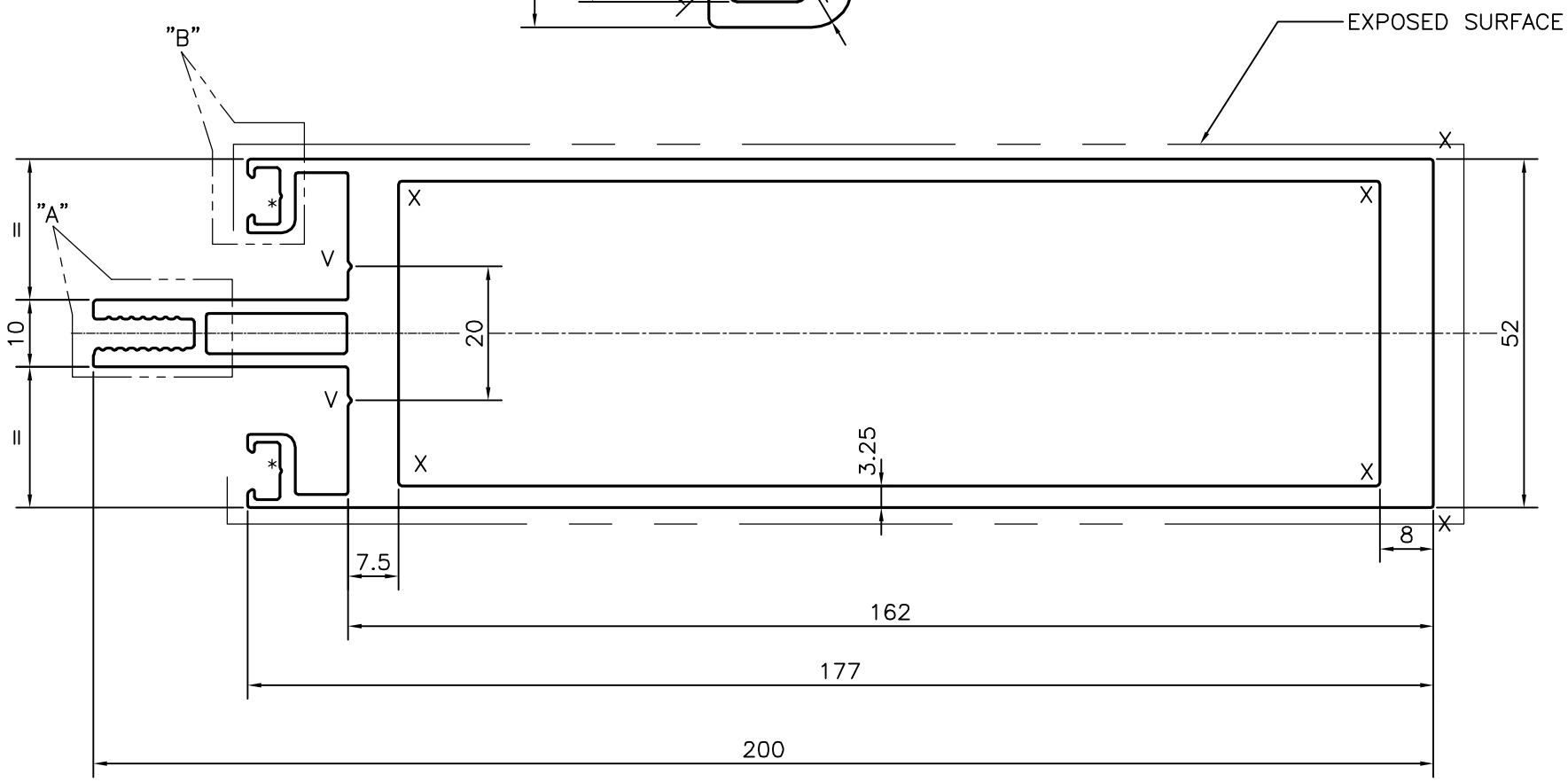

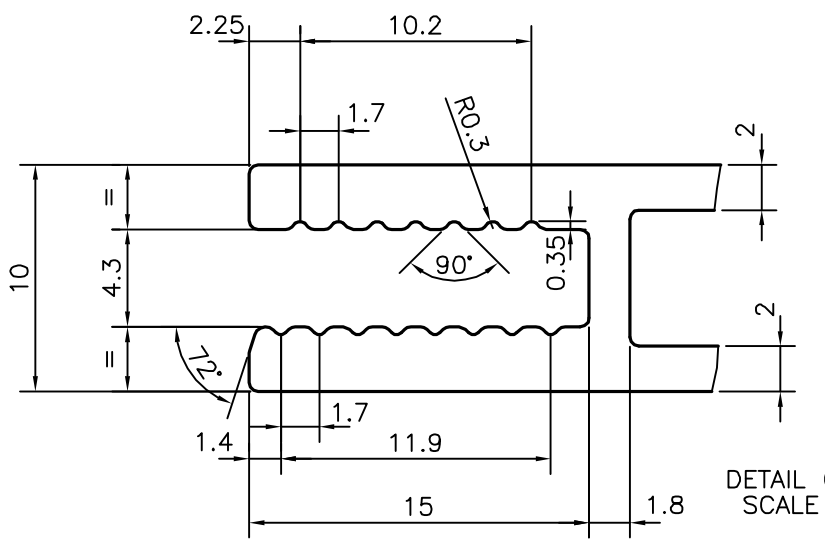

DETAIL OF "A"
SCALE 3:1

* = 0.30x90° (2 PLACES)
V = 0.50x90° (2 PLACES)
X = 0.50MM RADIUS (6 PLACES)

JINDAL SYMBOL OF QUALITY AN ISO 9002 COMPANY	*JINDAL ALUMINIUM LTD.* *BANGALORE-560073 (INDIA)*		NAME / DATE
		DRAWN	J.P.KAUSHIK 13-05-2015
		CHECKED	
		APPROVED	S.S.GARG 16-05-2015
1. ALL DIMENSIONS ARE IN mm. 2. ROUND OFF ALL SHARP CORNERS WITH 0.40 mm. 3. TOLERANCES WILL BE AS PER IS:6477-1983 UNLESS OTHERWISE SPECIFIED		SCALE	1:1
		AREA mm^2	2053.541
		PERIMETER mm.	657.291
		WEIGHT kg/m	5.545
PARTY'S NAME	GSC GLASS PVT. LTD., NOIDA	DRAWING No.	SECTION No.
PARTY'S DRAWING No.	AS PER AutoCAD DRAWING M60982	P-14635-1	-
ALLOY & TEMPER	6063 T6	X1878	X1878
DESCRIPTION	CURTAIN WALL SECTION	35977	35977