P–14398
S4377
35980

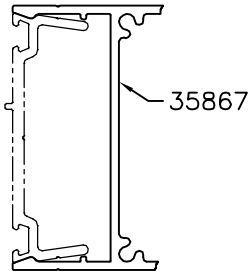

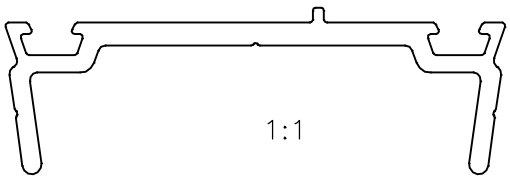

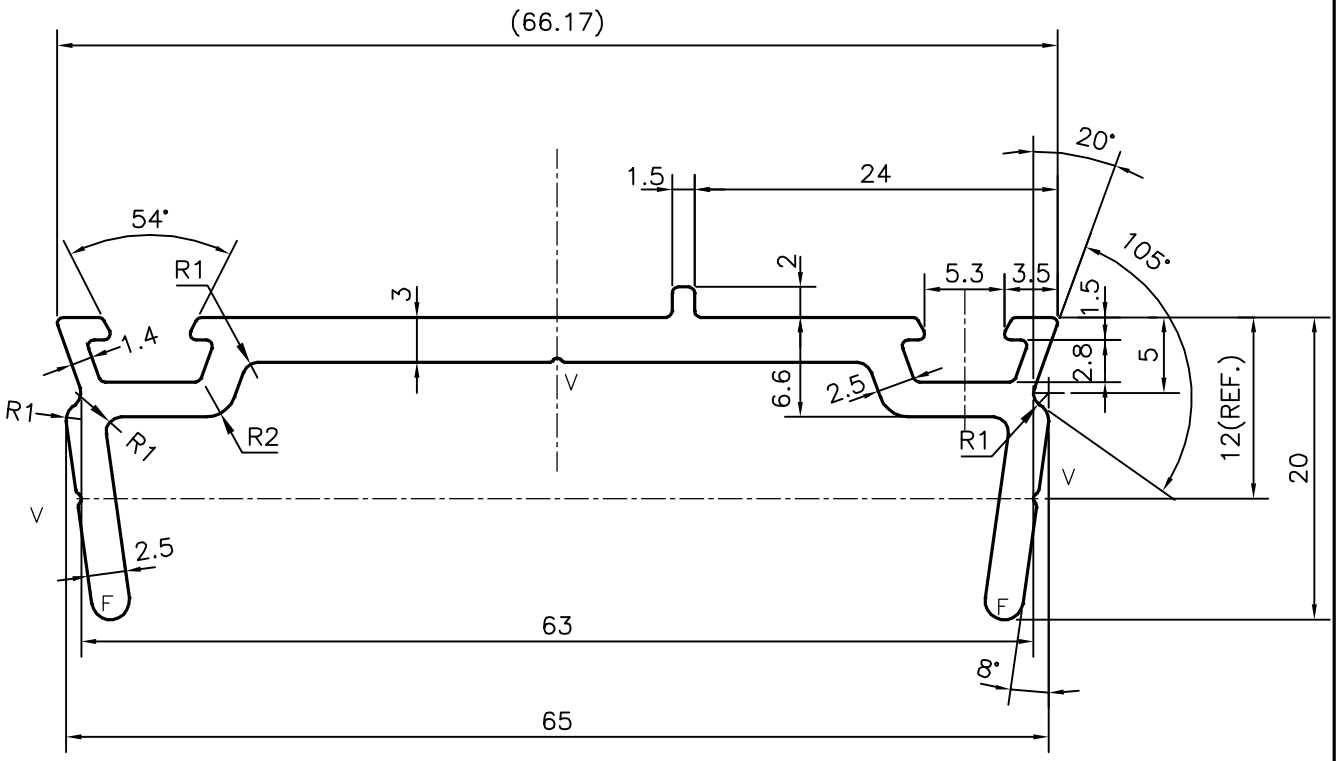

F =FULL RADIUS (2 PLACES)
V = V GROOVE 0.3x90° (3 PLACES)

JINDAL SYMBOL OF QUALITY AN ISO 9001 COMPANY	*JINDAL ALUMINIUM LTD.* *BANGALORE–560073 (INDIA)*		NAME	DATE
		DRAWN	*J.P.KAUSHIK*	03–02–2015
		CHECKED		
		APPROVED	S.S.GARG	05–02–2015

1. ALL DIMENSIONS ARE IN mm.
2. ROUND OFF ALL SHARP CORNERS WITH 0.4 mm.
3. TOLERANCES WILL BE AS PER IS:3965–1981, UNLESS OTHERWISE SPECIFIED

SCALE	2:1
AREA mm^2	282.776
PERIMETER mm.	226.579
WEIGHT kg/m	0.763

PARTY'S NAME	A.S.FABTECH (INDIA) PVT. LTD., KOLKATA
PARTY'S DRAWING No.	AS PER AutoCAD DRAWING & REQUIREMENT
ALLOY & TEMPER	HE9 WP
DESCRIPTION	PRESSURE PLATE SECTION

DRAWING No.	SECTION No.
P–14398	–
S4377	S4377
35980	35980