P–16906–1
S5368
36011

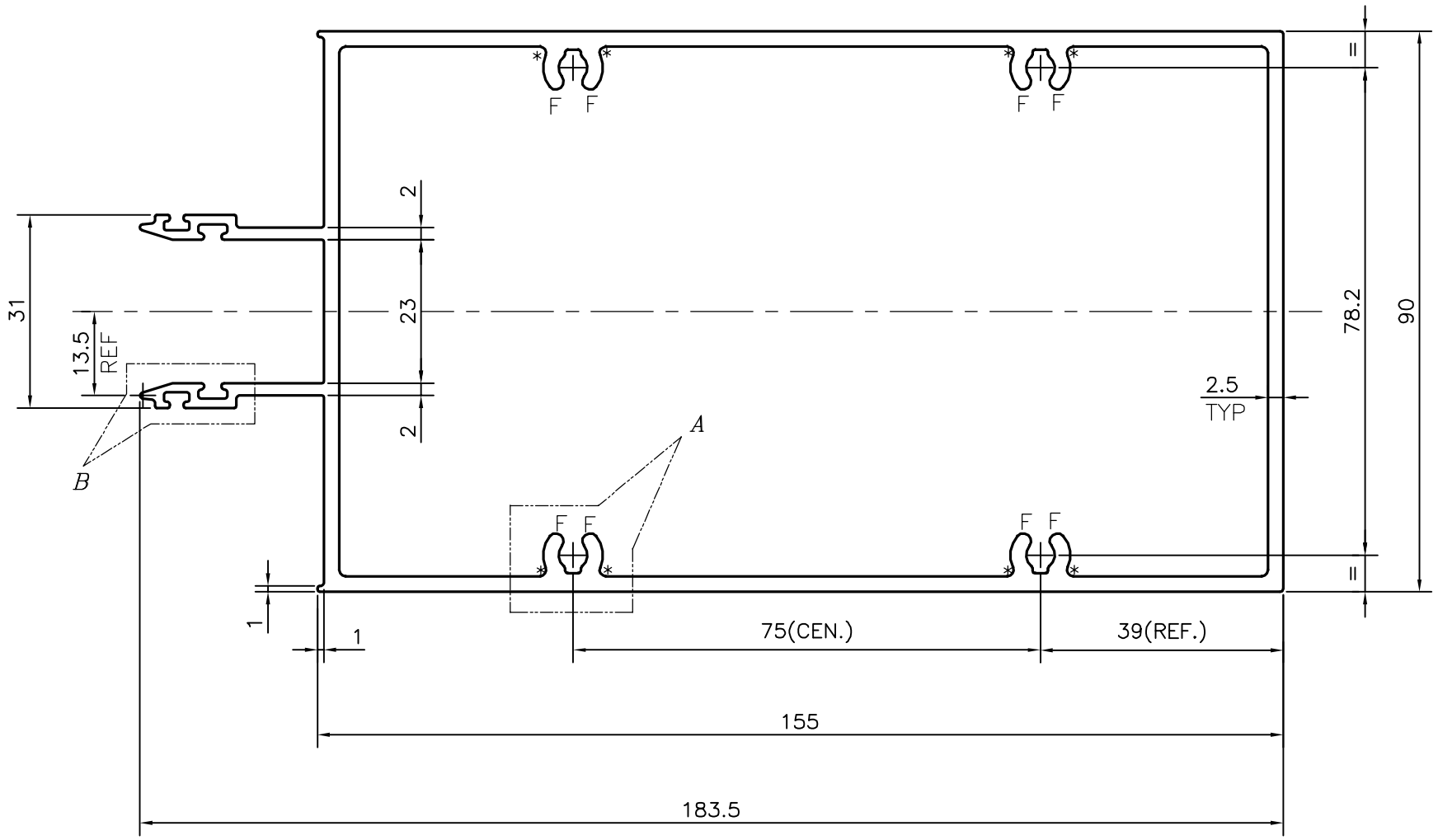

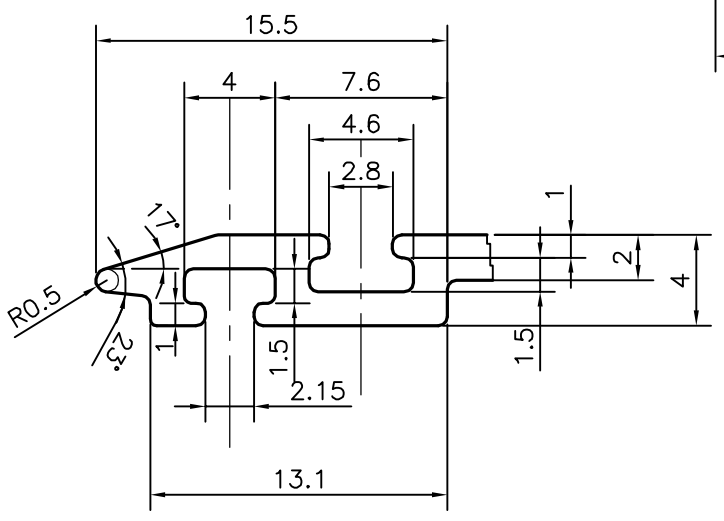

DETAIL OF "B"
SCALE 3:1

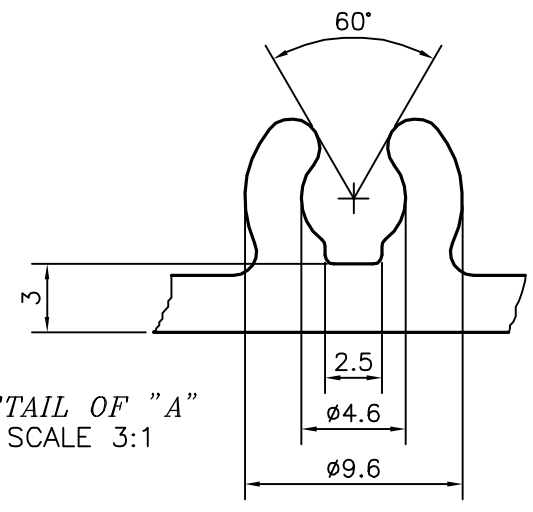

DETAIL OF "A"
SCALE 3:1

* = RADIUS 1 mm. (8 PLACES)
F = FULL RADIUS (8 PLACES)

TOLERANCES ON OVERALL DIMENSIONS OF HOLLOW SECTIONS

UPTO 20.0mm – ±0.30	UPTO 80.0mm – ±0.70	UPTO 180.0mm – ±1.27
UPTO 30.0mm – ±0.38	UPTO 100.0mm – ±0.80	UPTO 200.0mm – ±1.40
UPTO 40.0mm – ±0.45	UPTO 120.0mm – ±0.90	UPTO 225.0mm – ±1.52
UPTO 50.0mm – ±0.52	UPTO 140.0mm – ±1.00	
UPTO 60.0mm – ±0.60	UPTO 160.0mm – ±1.14	

1. STRAIGHTNESS=1.7mm/M
2. TWIST=1.7mm/M
3. ANGULARITY= ±2°
4. FLATNESS =0.006xWIDTH

JINDAL
SYMBOL OF QUALITY
AN ISO 9001 COMPANY

JINDAL ALUMINIUM LTD.
BANGALORE–560073 (INDIA)

	NAME	DATE
DRAWN	J.P.KAUSHIK	04–04–2017
CHECKED		
APPROVED	B.NATARAJ	20–04–2017

1. ALL DIMENSIONS ARE IN mm.
2. ROUND OFF ALL SHARP CORNERS WITH 0.40 mm.
3. TOLERANCES WILL BE AS PER IS:6477–1983 , UNLESS OTHERWISE SPECIFIED

SCALE	1:1
AREA mm^2	1478.759
PERIMETER mm.	640.527
WEIGHT kg/m	3.993

PARTY'S NAME	GLOBAL SYNDICATE, BANGALORE
PARTY'S DRAWING No.	AS PER DRAWING–SOB/LULU/SE102
ALLOY & TEMPER	6063 T6
DESCRIPTION	CURTAIN WALL SECTION

DRAWING No.	SECTION No.
P–16906–1	–
S5368	S5368
36011	36011