P–16018
S5017
36044

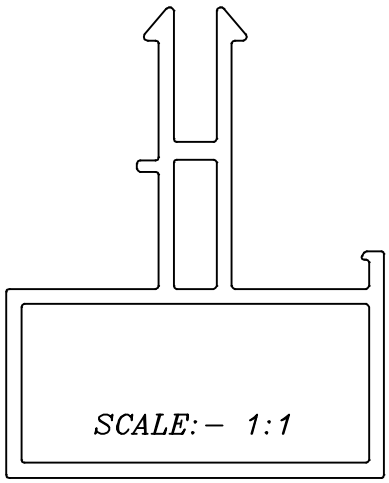

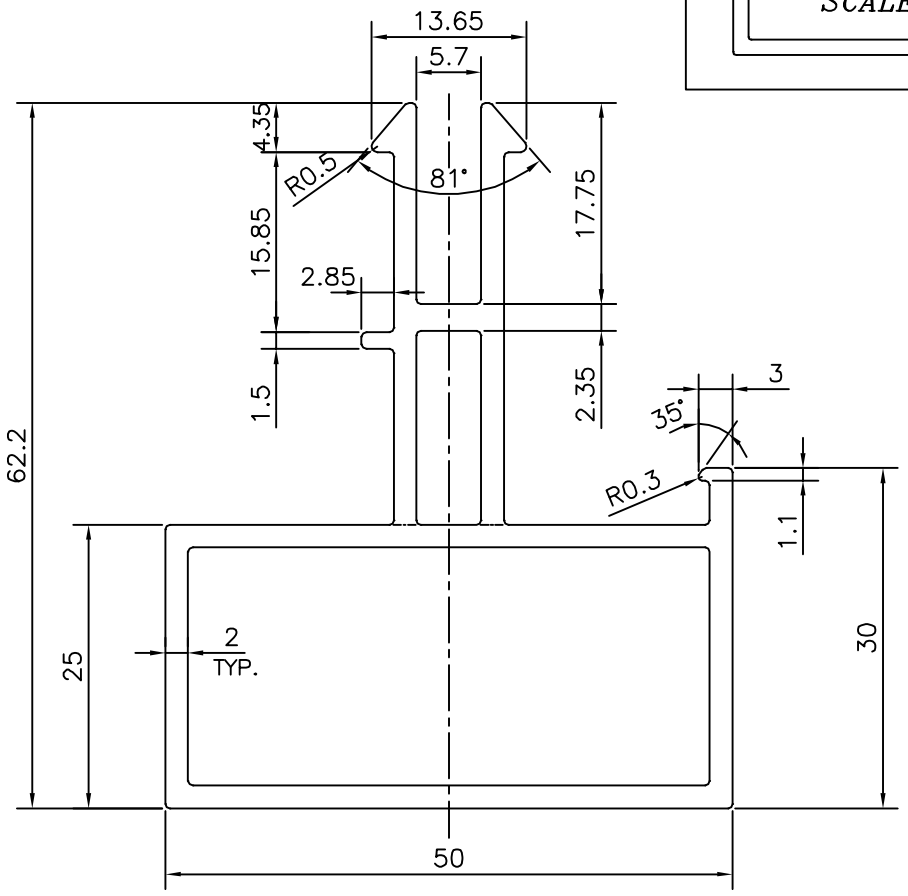

TOLERANCES ON OVERALL WIDTHS & WIDTHS ACROSS FLATS OF BARS, & REGULAR SECTIONS

UPTO 6.40mm – ±0.20	UPTO 32.0mm – ±0.38	UPTO 120.0mm – ±0.85	1. STRAIGHTNESS=1.7mm/M
UPTO 10.0mm – ±0.23	UPTO 50.0mm – ±0.46	UPTO 160.0mm – ±1.02	2. TWIST=1.7mm/M
UPTO 12.0mm – ±0.25	UPTO 60.0mm – ±0.53	UPTO 200.0mm – ±1.14	3. ANGULARITY= ±2°
UPTO 16.0mm – ±0.28	UPTO 80.0mm – ±0.69	UPTO 250.0mm – ±1.40	4. FLATNESS =0.007xWIDTH
UPTO 25.0mm – ±0.30	UPTO 100.0mm – ±0.75	UPTO 300.0mm – ±1.65	

JINDAL
SYMBOL OF QUALITY
AN ISO 9001 COMPANY

JINDAL ALUMINIUM LTD.

BANGALORE–560073 (INDIA)

	NAME	DATE
DRAWN	*PARVESH*	24–06–2016
CHECKED		
APPROVED	S.S. GARG	11–07–2016

1. ALL DIMENSIONS ARE IN mm.
2. ROUND OFF ALL SHARP CORNERS WITH 0.40 mm.
3. TOLERANCES WILL BE AS PER IS:6477–1983 , UNLESS OTHERWISE SPECIFIED

SCALE	1.5:1
AREA mm^2	467.295
PERIMETER mm.	277.446
WEIGHT kg/m	1.262

PARTY'S NAME	AHLUWALIA CONTRACTS (INDIA) LTD., MUMBAI
PARTY'S DRAWING No.	AS PER AUTOCAD DRAWING
ALLOY & TEMPER	6063 T6
DESCRIPTION	CURTAIN WALL SECTION

DRAWING No.	SECTION No.
P–16018	–
S5017	S5017
36044	36044