P−16027
S5026
36047

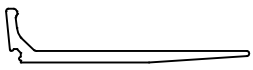

SCALE:− 1:1

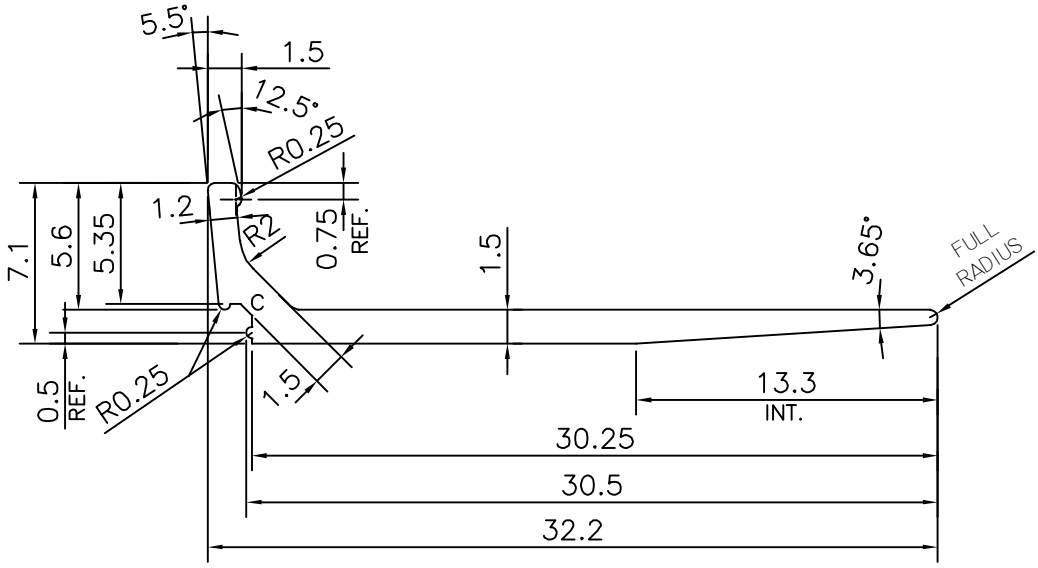

C = CHAMFER 0.5x45° (1 PLACE)

TOLERANCES ON OVERALL WIDTHS & WIDTHS ACROSS FLATS OF BARS, & REGULAR SECTIONS

UPTO 6.40mm − ±0.20	UPTO 32.0mm − ±0.38	UPTO 120.0mm − ±0.85	1. STRAIGHTNESS=1.7mm/M
UPTO 10.0mm − ±0.23	UPTO 50.0mm − ±0.46	UPTO 160.0mm − ±1.02	2. TWIST=1.7mm/M
UPTO 12.0mm − ±0.25	UPTO 60.0mm − ±0.53	UPTO 200.0mm − ±1.14	3. ANGULARITY= ±2°
UPTO 16.0mm − ±0.28	UPTO 80.0mm − ±0.69	UPTO 250.0mm − ±1.40	4. FLATNESS =0.007xWIDTH
UPTO 25.0mm − ±0.30	UPTO 100.0mm − ±0.75	UPTO 300.0mm − ±1.65	

JINDAL

SYMBOL OF QUALITY
AN ISO 9001 COMPANY

JINDAL ALUMINIUM LTD.

BANGALORE−560073 (INDIA)

	NAME	DATE
DRAWN	PARVESH	24−06−2016
CHECKED		
APPROVED	S.S. GARG	11−07−2016

1. ALL DIMENSIONS ARE IN mm.
2. ROUND OFF ALL SHARP CORNERS WITH 0.40 mm.
3. TOLERANCES WILL BE AS PER IS:3965−1981 , UNLESS OTHERWISE SPECIFIED

SCALE	3:1
AREA mm^2	49.08
PERIMETER mm.	75.602
WEIGHT kg/m	0.133

PARTY'S NAME	AHLUWALIA CONTRACTS (INDIA) LTD., MUMBAI
PARTY'S DRAWING No.	AS PER AUTOCAD DRAWING
ALLOY & TEMPER	6063 T6
DESCRIPTION	CURTAIN WALL SECTION

DRAWING No.	SECTION No.
P−16027	−
S5026	S5026
36047	36047