P–18067–4
S5813
36056

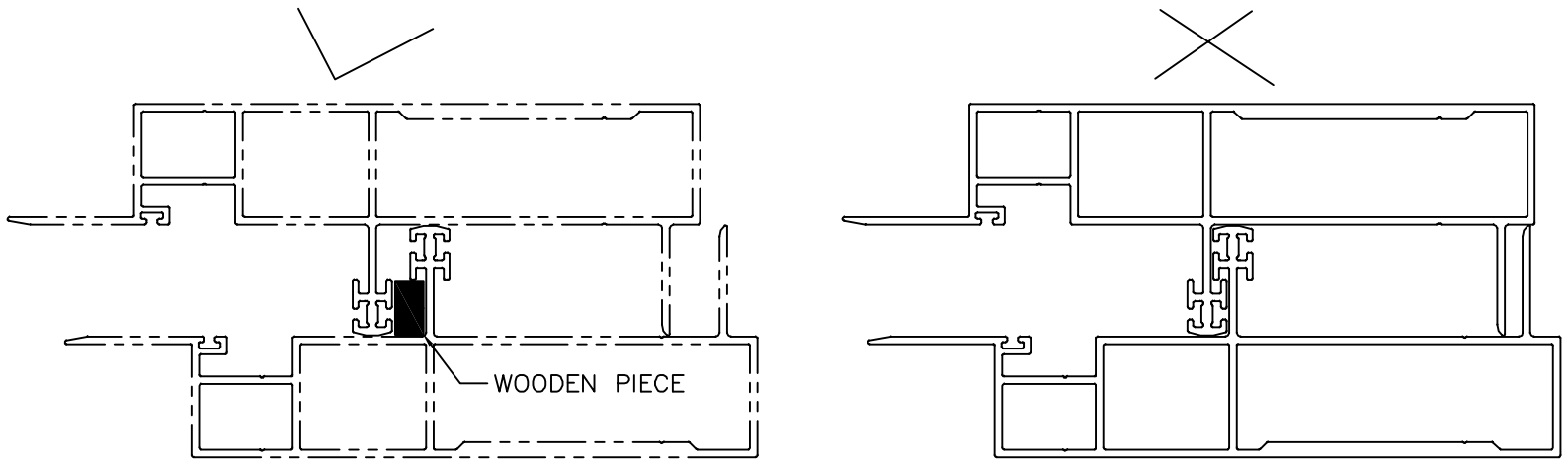

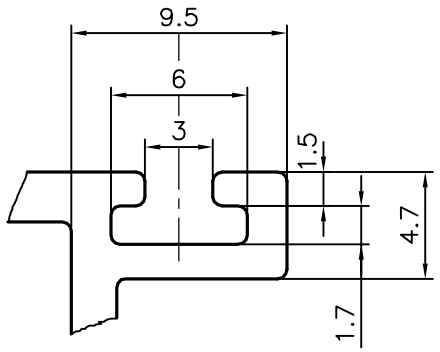

DETAIL OF "B"
SCALE 3:1

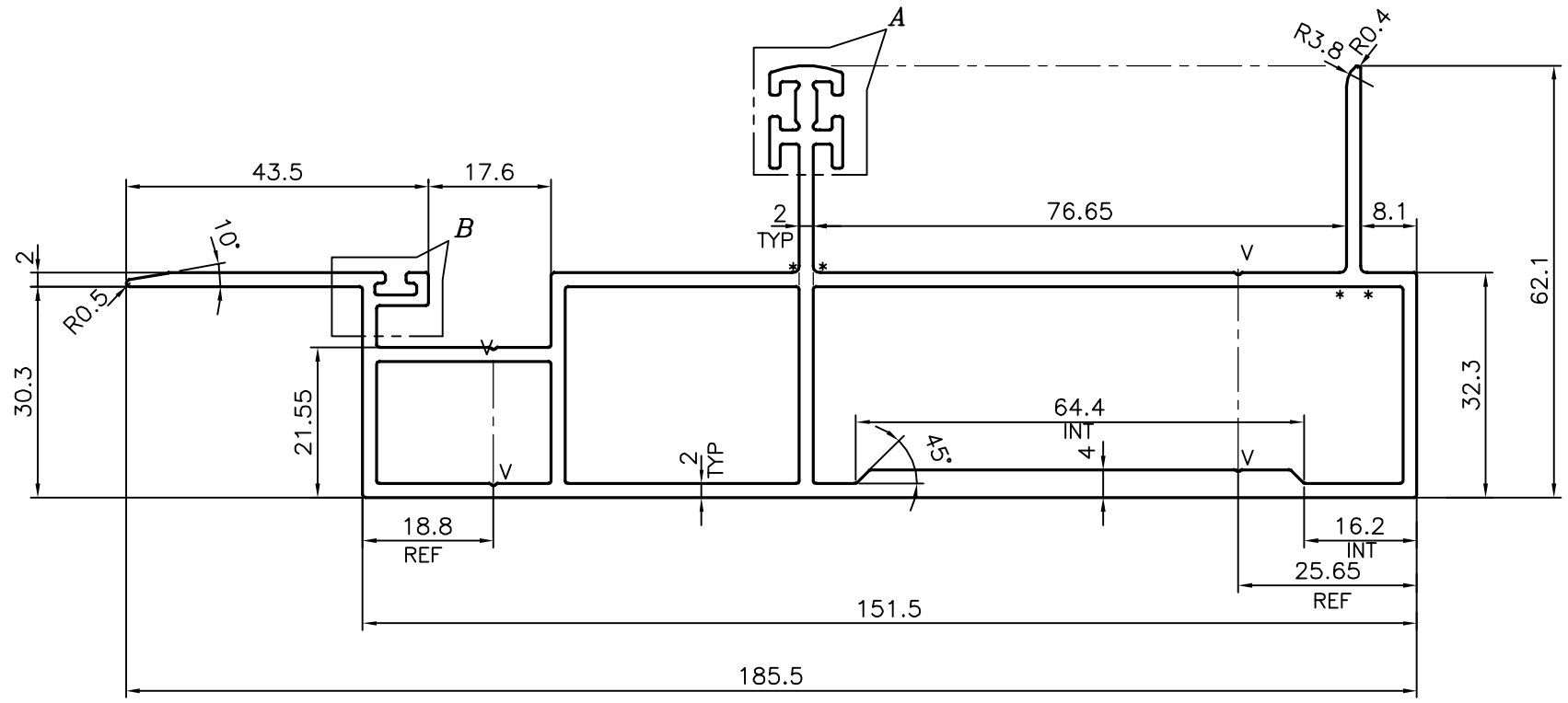

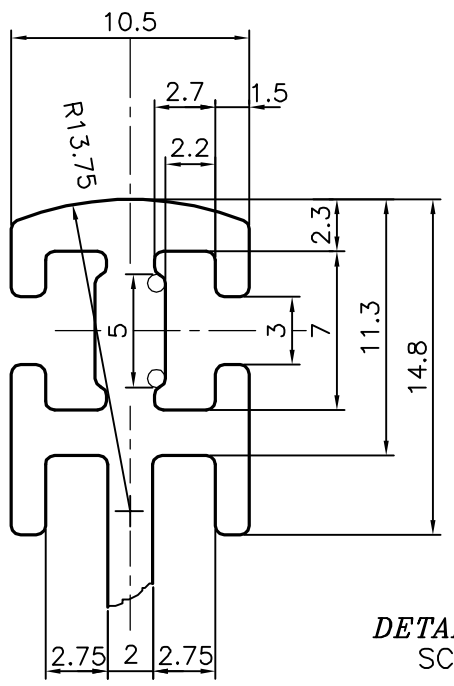

DETAIL OF "A"
SCALE 3:1

* = 1.0 RADIUS (4 PLACES)

V = V GROOVE 0.3x90° (4 PLACES)

JINDAL
SYMBOL OF QUALITY
AN ISO 9001 COMPANY

JINDAL ALUMINIUM LTD.
BANGALORE–560073 (INDIA)

1. ALL DIMENSIONS ARE IN mm.
2. ROUND OFF ALL SHARP CORNERS WITH 0.40 mm.
3. TOLERANCES WILL BE AS PER IS:6477–1983 UNLESS OTHERWISE SPECIFIED

		NAME	DATE
DRAWN		J.P.KAUSHIK	03–05–2018
CHECKED			
APPROVED		B.NATARAJA	05–05–2018
SCALE			1:1
AREA mm^2			1221.802
PERIMETER mm.			655.309
WEIGHT kg/m			3.299
PARTY'S NAME	V & G FACADE TECHNOLOGY, AHMEDABAD	DRAWING No.	SECTION No.
PARTY'S DRAWING No.	AS PER DRAWING	P–18067–4	–
ALLOY & TEMPER	63400 WP	S5813	S5813
DESCRIPTION	MALE MULLION SECTION	36056	36056