P–18068–3
S5814
36057

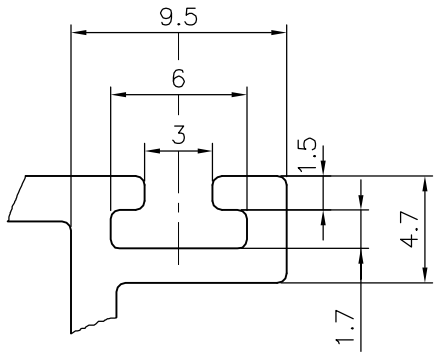

DETAIL OF "B"
SCALE 3:1

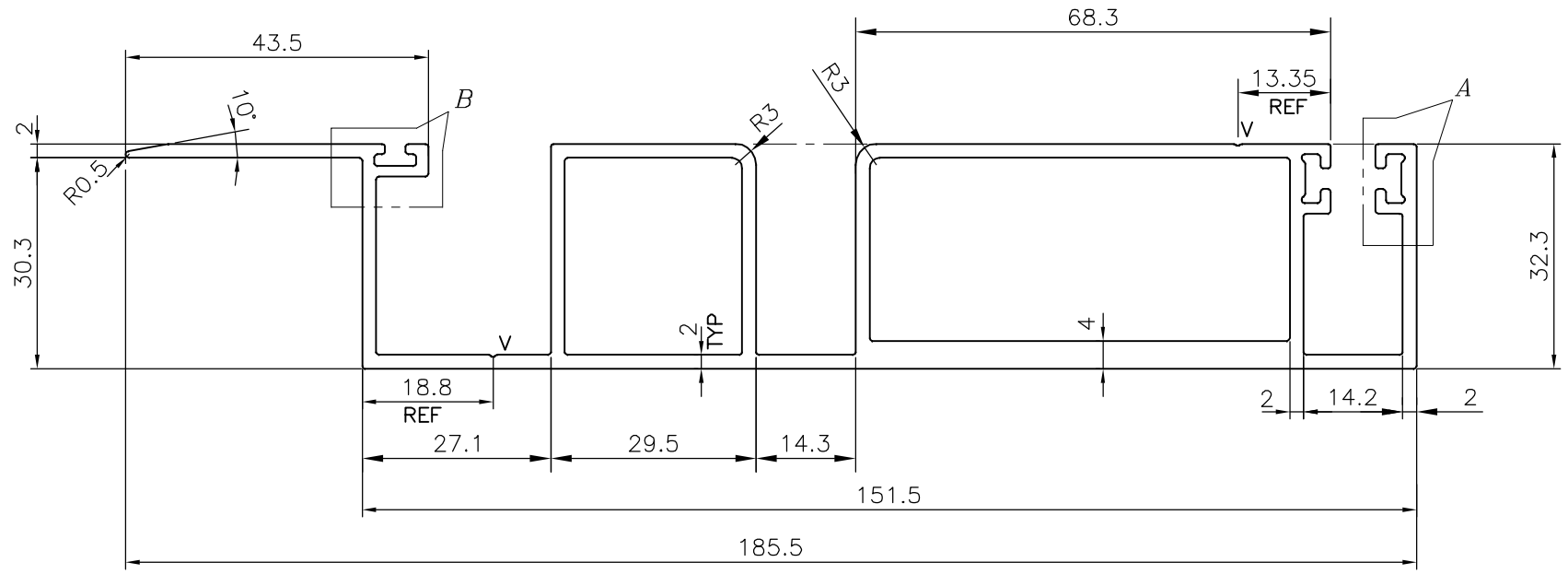

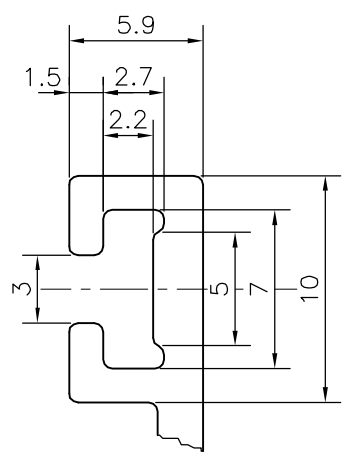

DETAIL OF "A"
SCALE 3:1

V = V GROOVE 0.3x90° (2 PLACES)

JINDAL SYMBOL OF QUALITY AN ISO 9001 COMPANY	*JINDAL ALUMINIUM LTD.* *BANGALORE–560073 (INDIA)*		NAME	DATE
		DRAWN	J.P.KAUSHIK	03–05–2018
		CHECKED		
		APPROVED	*B.NATARAJA*	05–05–2018
1. ALL DIMENSIONS ARE IN mm. 2. ROUND OFF ALL SHARP CORNERS WITH 0.40 mm. 3. TOLERANCES WILL BE AS PER IS:6477–1983 UNLESS OTHERWISE SPECIFIED		SCALE		1:1
		AREA mm^2		1077.583
		PERIMETER mm.		682.936
		WEIGHT kg/m		2.909
PARTY'S NAME	V & G FACADE TECHNOLOGY, AHMEDABAD	DRAWING No.		SECTION No.
PARTY'S DRAWING No.	AS PER DRAWING	P–18068–3		–
ALLOY & TEMPER	63400 WP	S5814 36057		S5814 36057
DESCRIPTION	FEMALE MULLION SECTION			