P−16162−1
X2039
36069

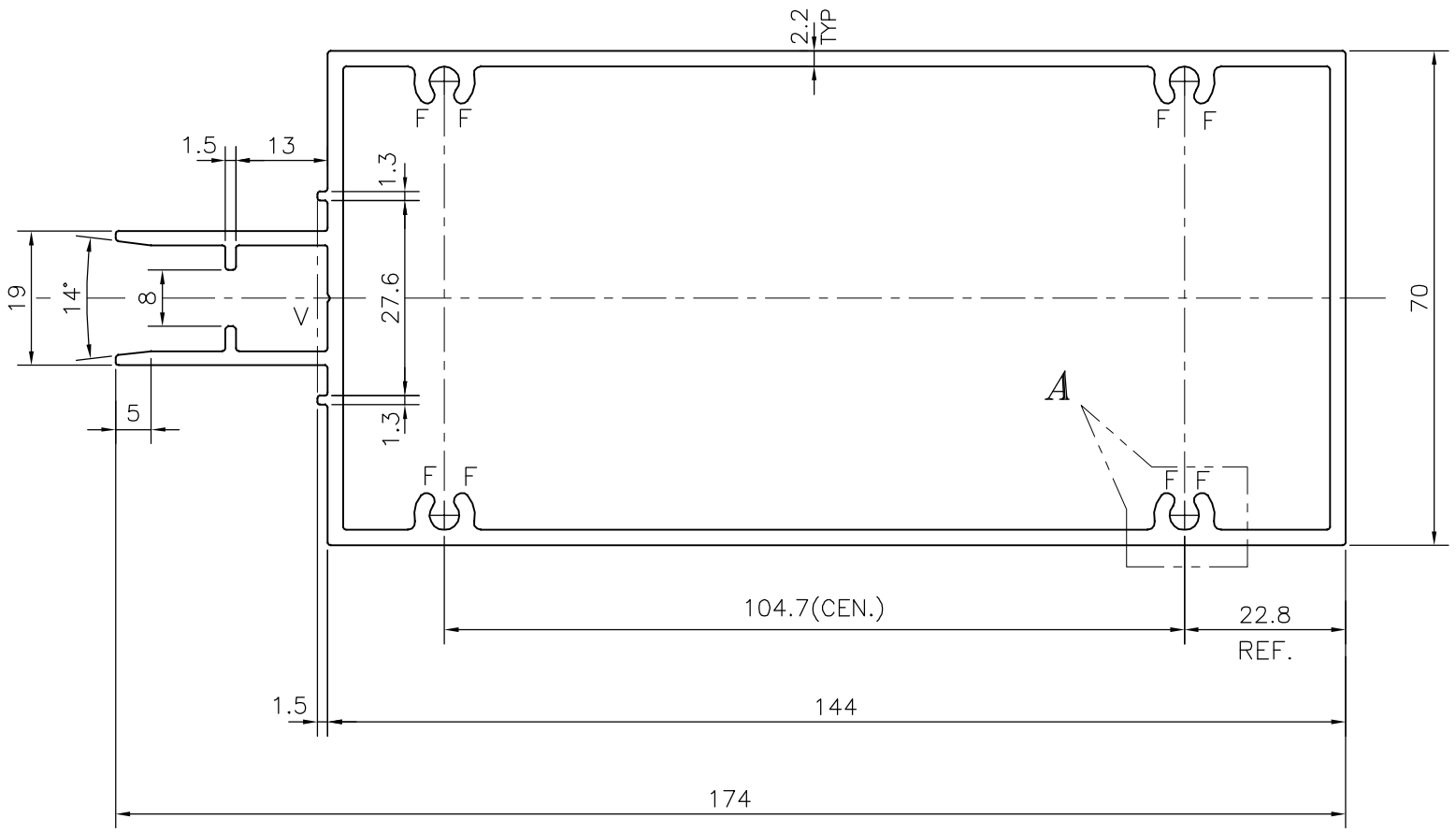

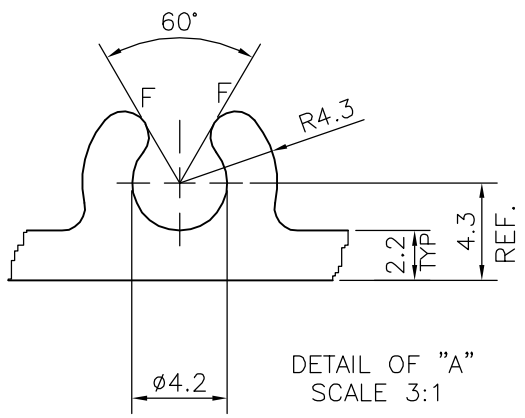

DETAIL OF "A"
SCALE 3:1

F= FULL RADIUS(8 PLACES)

V= V GROOVE 0.3x90°(ONE PLACES)

JINDAL SYMBOL OF QUALITY AN ISO 9001 COMPANY	*JINDAL ALUMINIUM LTD.* *BANGALORE−560073 (INDIA)*		NAME / DATE
		DRAWN	J.P.KAUSHIK / 09−08−2016
		CHECKED	
		APPROVED	S.S. GARG / 12−08−2016
1. ALL DIMENSIONS ARE IN mm. 2. ROUND OFF ALL SHARP CORNERS WITH 0.40 mm. 3. TOLERANCES WILL BE AS PER IS:6477−1983 UNLESS OTHERWISE SPECIFIED		SCALE	1:1
		AREA mm^2	1152.617
		PERIMETER mm.	562.315
		WEIGHT kg/m	3.112
PARTY'S NAME	HATIM GLAZING & CLADDING PVT. LTD., MUMBAI	DRAWING No.	SECTION No.
PARTY'S DRAWING No.	AS PER AutoCAD DRAWING	P−16162−1	−
ALLOY & TEMPER	6063 T6	X2039	X2039
DESCRIPTION	CURTAIN WALL SECTION	36069	36069