P−16167
X2044
36074

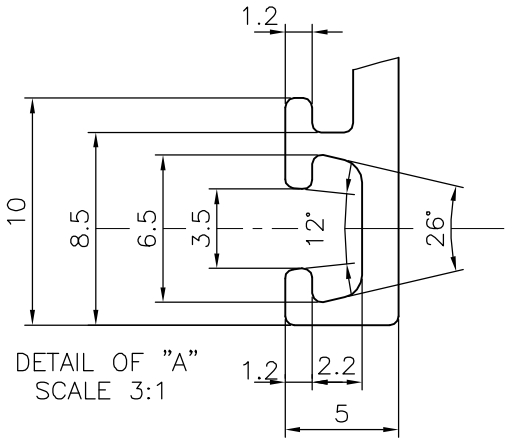

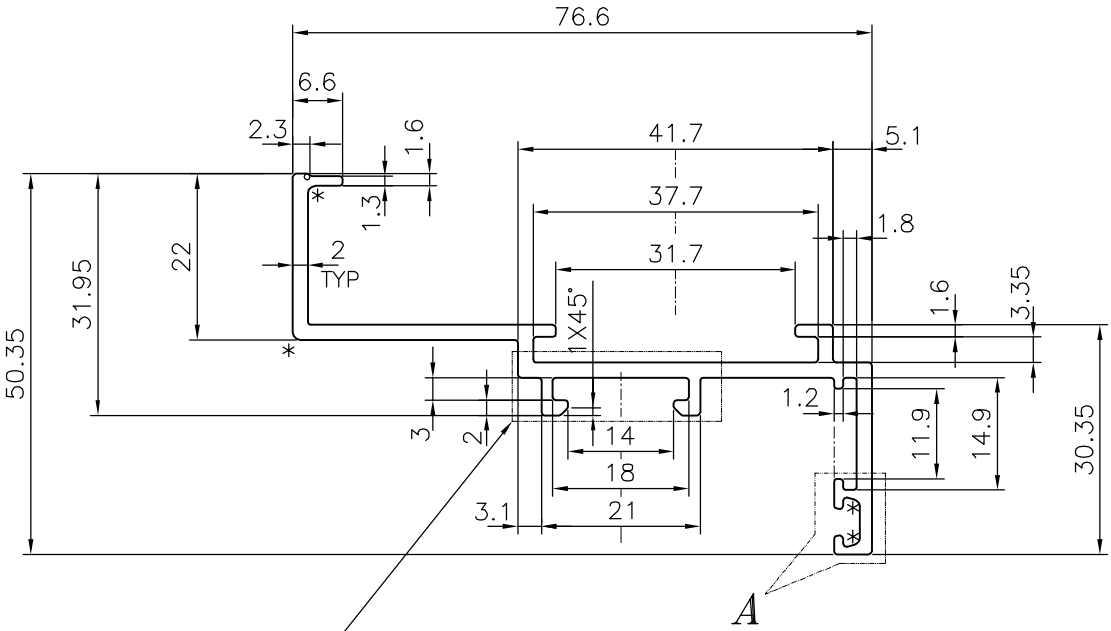

ISSUE−3

THIS PORTION MODIFIED & ADDED.

WEIGHT ALSO CHANGED FROM 0.874 kg/m TO 0.834 kg/m

* = 1.0 RADIUS (4 PLACES)

V = V GROOVE 0.30x90°(ONE PLACES)

			NAME	DATE
JINDAL SYMBOL OF QUALITY AN ISO 9001 COMPANY	*JINDAL ALUMINIUM LTD.* *BANGALORE−560073 (INDIA)*	DRAWN	J.P.KAUSHIK	12−07−2017
		CHECKED		
		APPROVED	*B.NATARAJA*	14−07−2017

1. ALL DIMENSIONS ARE IN mm.
2. ROUND OFF ALL SHARP CORNERS WITH 0.40 mm.
3. TOLERANCES WILL BE AS PER IS:3965−1981 UNLESS OTHERWISE SPECIFIED

SCALE		1:1	
AREA mm^2		308.802	
PERIMETER mm.		326.647	
WEIGHT kg/m		0.834	
PARTY'S NAME	HATIM GLAZING & CLADDING PVT. LTD., MUMBAI	DRAWING No.	SECTION No.
PARTY'S DRAWING No.	AS PER AutoCAD DRAWING	P−16167	−
ALLOY & TEMPER	6063 T6	X2044	X2044(ISSUE−3)
DESCRIPTION	CURTAIN WALL SECTION	36074	36074