P-18927-1
S6083
36097

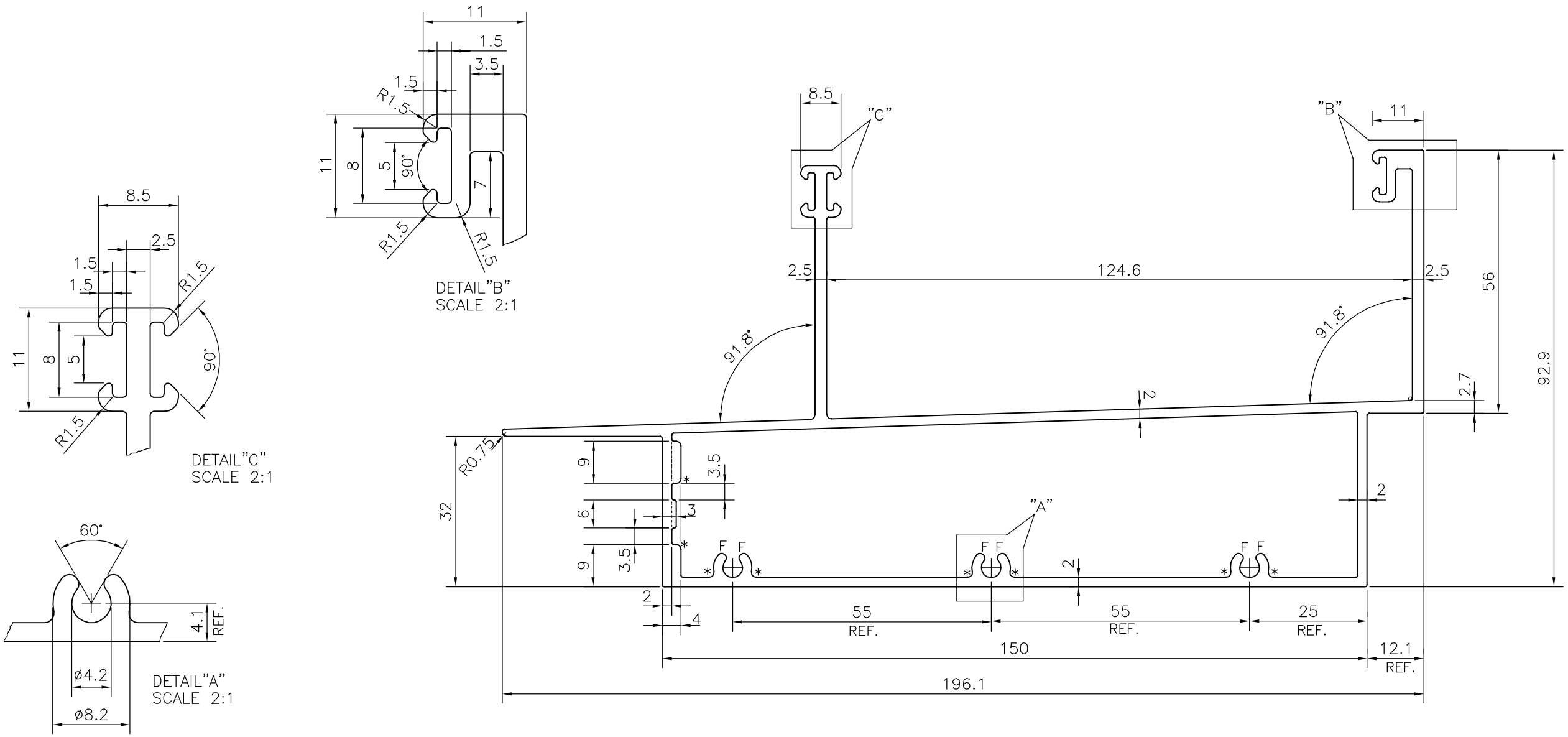

*= RADIUS 1.0 (8 PLACES)

F= FULL RADIUS (6 PLACES)

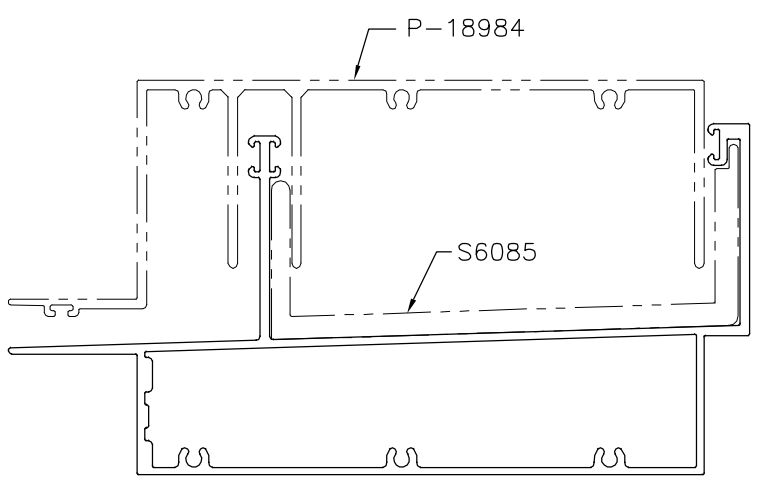

SCALE 1:2

TOLERANCES ON OVERALL WIDTHS & WIDTHS ACROSS FLATS OF BARS, & REGULAR SECTIONS			
UPTO 6.40mm – ±0.20 UPTO 10.0mm – ±0.23 UPTO 12.0mm – ±0.25 UPTO 16.0mm – ±0.28 UPTO 25.0mm – ±0.30	UPTO 32.0mm – ±0.38 UPTO 50.0mm – ±0.46 UPTO 60.0mm – ±0.53 UPTO 80.0mm – ±0.69 UPTO 100.0mm – ±0.75	UPTO 120.0mm – ±0.85 UPTO 160.0mm – ±1.02 UPTO 200.0mm – ±1.14 UPTO 250.0mm – ±1.40 UPTO 300.0mm – ±1.65	UPTO 320.00mm – ±1.70

JINDAL

SYMBOL OF QUALITY
AN ISO 9001 COMPANY

JINDAL ALUMINIUM LTD.

BANGALORE-560073 (INDIA)

	NAME	DATE
DRAWN	J.P.KAUSHIK	11-12-2018
CHECKED		
APPROVED	B,NATARAJA	21-12-2018

1. ALL DIMENSIONS ARE IN mm.
2. ROUND OFF ALL SHARP CORNERS WITH 0.40 mm.
3. TOLERANCES WILL BE AS PER IS:6477-1983 UNLESS OTHERWISE SPECIFIED

SCALE	1:1
AREA mm^2	1277.464
PERIMETER mm.	744.59
WEIGHT kg/m	3.449

PARTY'S NAME	PSP PROJECTS LTD., SURAT
PARTY'S DRAWING No.	FCD: AL-1003
ALLOY & TEMPER	6063 T6
DESCRIPTION	CURTAIN WALL HEAD SECTION

DRAWING No.	SECTION No.
P-18927-1	–
S6083	S6083
36097	36097