P–18928–1
S6084
36098

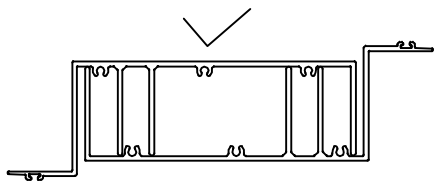

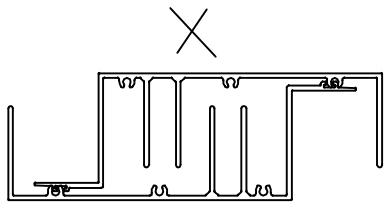

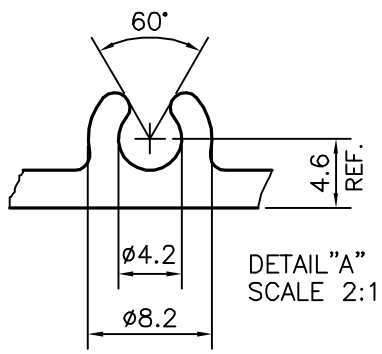

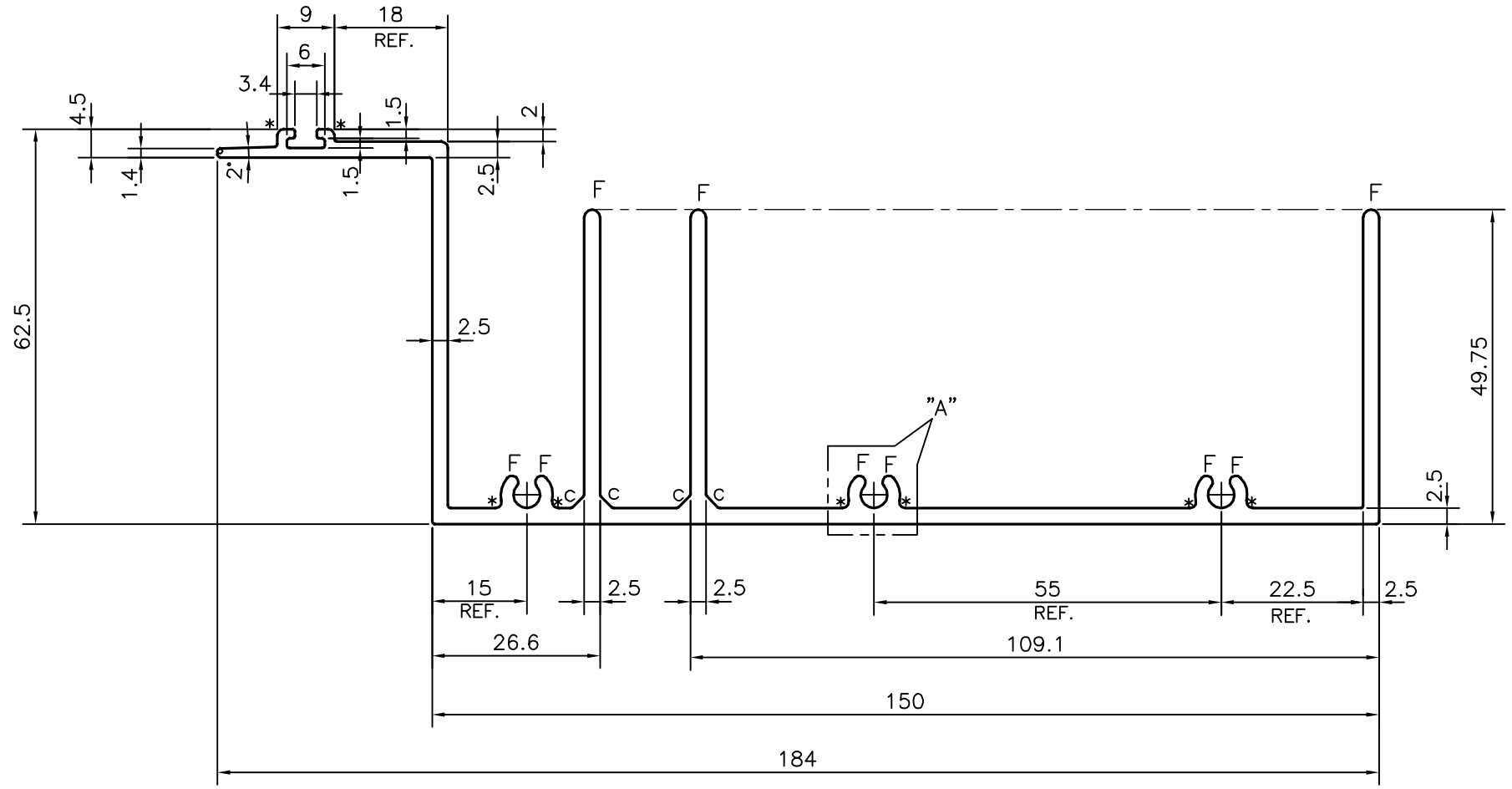

*= RADIUS 1.0 (8 PLACES)
c= CHAMFER 2x45° (4 PLACES)
F= FULL RADIUS (9 PLACES)

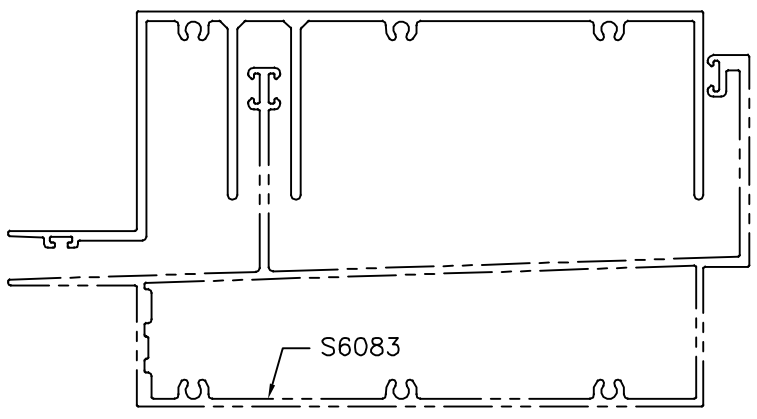

TOLERANCES ON OVERALL WIDTHS & WIDTHS ACROSS FLATS OF BARS, & REGULAR SECTIONS			
UPTO 6.40mm – ±0.20 UPTO 10.0mm – ±0.23 UPTO 12.0mm – ±0.25 UPTO 16.0mm – ±0.28 UPTO 25.0mm – ±0.30	UPTO 32.0mm – ±0.38 UPTO 50.0mm – ±0.46 UPTO 60.0mm – ±0.53 UPTO 80.0mm – ±0.69 UPTO 100.0mm – ±0.75	UPTO 120.0mm – ±0.85 UPTO 160.0mm – ±1.02 UPTO 200.0mm – ±1.14 UPTO 250.0mm – ±1.40 UPTO 300.0mm – ±1.65	UPTO 320.00mm – ±1.70

JINDAL
SYMBOL OF QUALITY
AN ISO 9001 COMPANY

JINDAL ALUMINIUM LTD.
BANGALORE–560073 (INDIA)

	NAME	DATE
DRAWN	J.P.KAUSHIK	11–12–2018
CHECKED		
APPROVED	B,NATARAJA	21–12–2018

1. ALL DIMENSIONS ARE IN mm.
2. ROUND OFF ALL SHARP CORNERS WITH 0.40 mm.
3. TOLERANCES WILL BE AS PER IS:3965–1981 UNLESS OTHERWISE SPECIFIED

SCALE	1:1
AREA mm^2	1026.969
PERIMETER mm.	826.728
WEIGHT kg/m	2.773

PARTY'S NAME	PSP PROJECTS LTD., SURAT
PARTY'S DRAWING No.	FCD: AL–1004
ALLOY & TEMPER	6063 T6
DESCRIPTION	CURTAIN WALL SILL SECTION

DRAWING No.	SECTION No.
P–18928–1	–
S6084	S6084
36098	36098