P−18936−2
S6090
36112

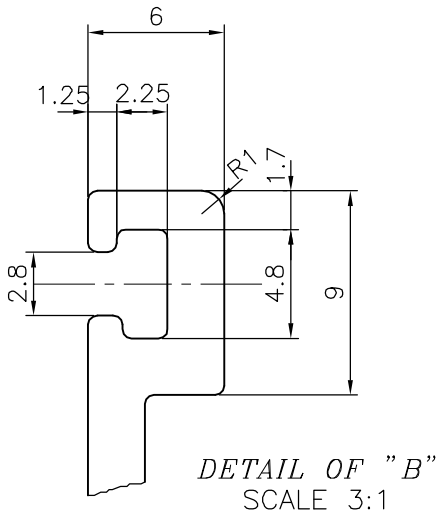

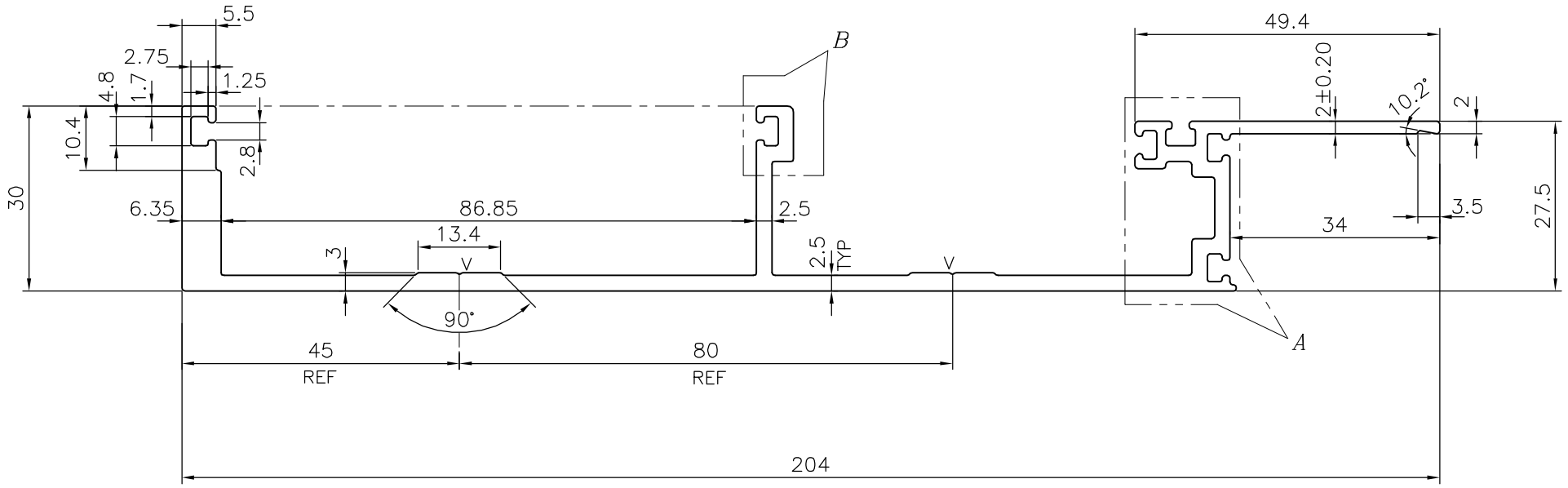

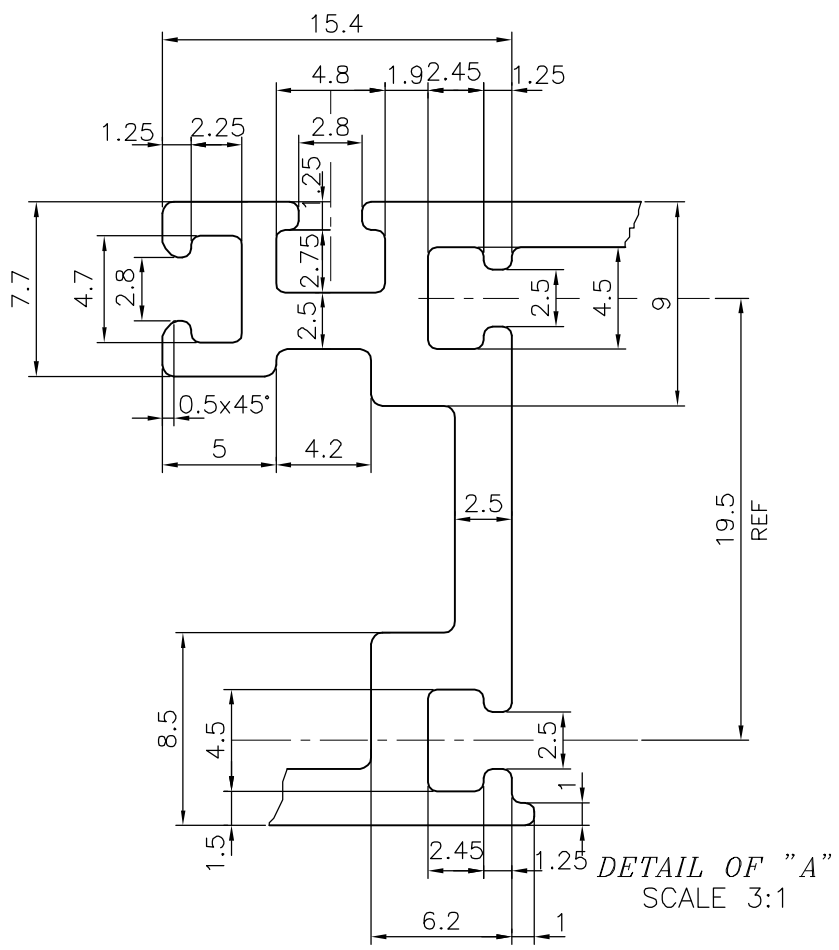

V = V GROOVE 0.3x90° (2 PLACES)

TOLERANCES ON OVERALL DIMENSIONS OF HOLLOW SECTIONS

UPTO 20.0mm − ±0.30	UPTO 80.0mm − ±0.70	UPTO 180.0mm − ±1.27	1. STRAIGHTNESS=1.7mm/M
UPTO 30.0mm − ±0.38	UPTO 100.0mm − ±0.80	UPTO 200.0mm − ±1.40	2. TWIST=1.7mm/M
UPTO 40.0mm − ±0.45	UPTO 120.0mm − ±0.90	UPTO 225.0mm − ±1.52	3. ANGULARITY= ±2°
UPTO 50.0mm − ±0.52	UPTO 140.0mm − ±1.00		4. FLATNESS =0.006xWIDTH
UPTO 60.0mm − ±0.60	UPTO 160.0mm − ±1.14		

JINDAL
SYMBOL OF QUALITY
AN ISO 9001 COMPANY

JINDAL ALUMINIUM LTD.
BANGALORE−560073 (INDIA)

	NAME	DATE
DRAWN	J.P.KAUSHIK	22−12−2018
CHECKED		
APPROVED	B,NATARAJA	29−12−2018

1. ALL DIMENSIONS ARE IN mm.
2. ROUND OFF ALL SHARP CORNERS WITH 0.40 mm.
3. TOLERANCES WILL BE AS PER IS:3965−1981 UNLESS OTHERWISE SPECIFIED

SCALE	1:1
AREA mm^2	866.013
PERIMETER mm.	665.939
WEIGHT kg/m	2.338

		DRAWING No.	SECTION No.
PARTY'S NAME	GLOBAL SYNDICATE, BANGALORE		
PARTY'S DRAWING No.	AS PER DRAWING	P−18936−2	−
ALLOY & TEMPER	6063 T6	S6090	S6090
DESCRIPTION	FEMALE MULLION SECTION	36112	36112