P–19412
S6242
36128

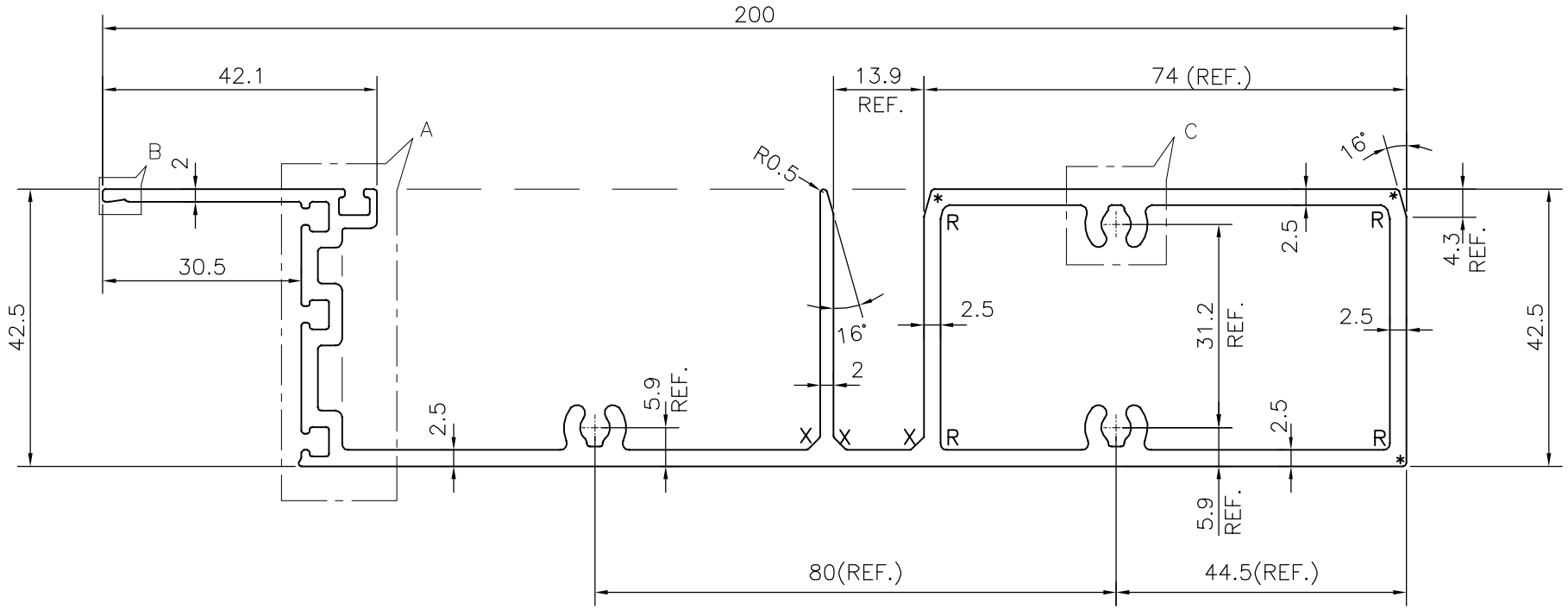

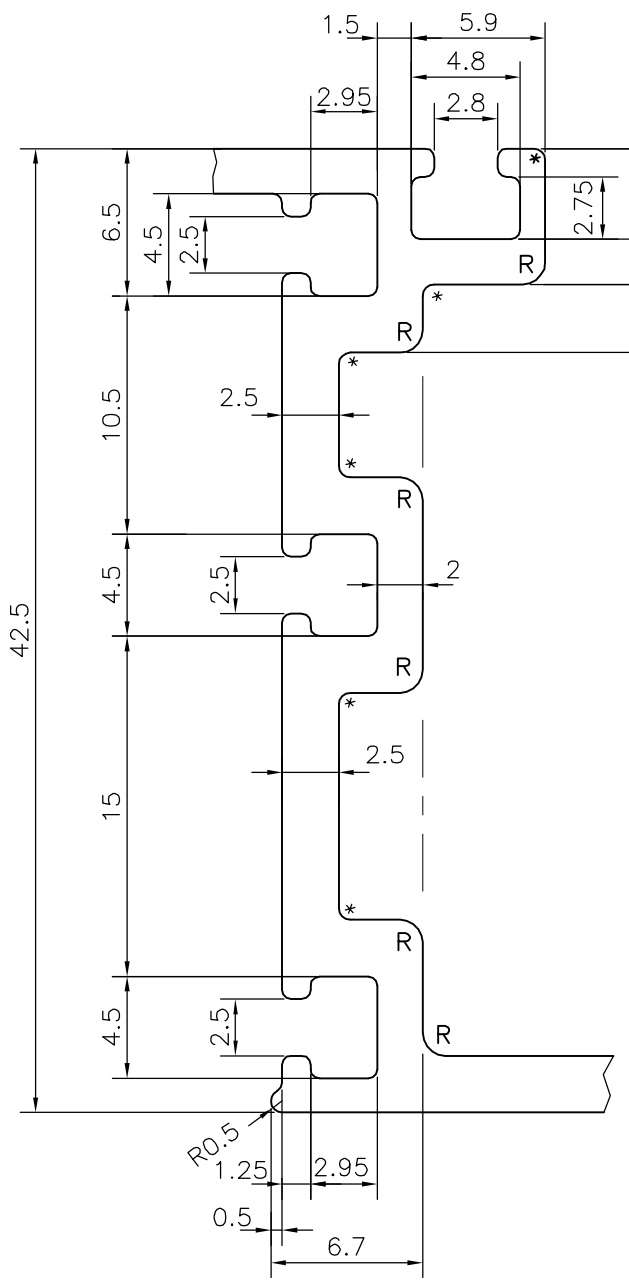

DETAIL A
3:1

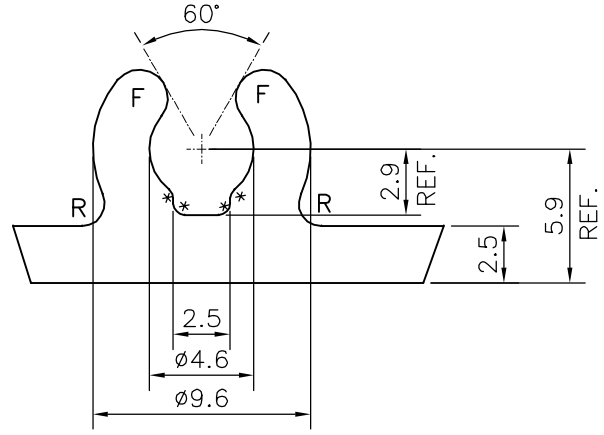

DETAIL C
3:1

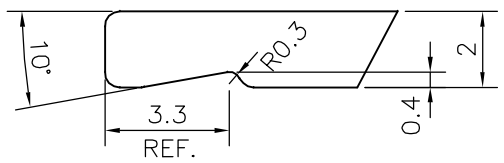

DETAIL B
5:1

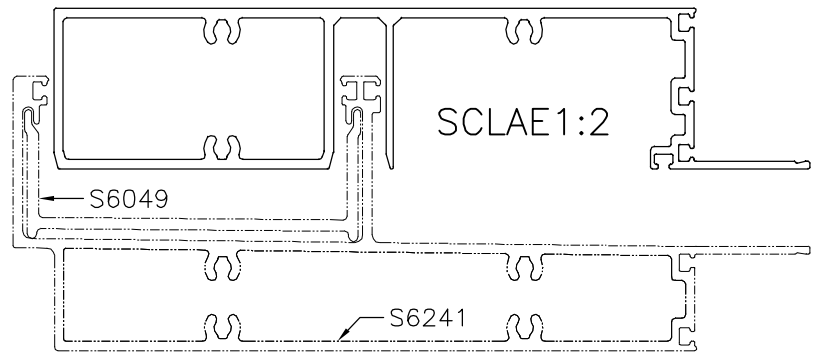

F = FULL RADIUS (6 PLACES)
R = R1 mm (19 PLACES)
* = R0.5 mm (21 PLACES)
X = CHAMFER 2x45° (3 PLACES)

TOLERANCES ON OVERALL DIMENSIONS OF HOLLOW SECTIONS

UPTO 20.0mm – ±0.30	UPTO 80.0mm – ±0.70	UPTO 180.0mm – ±1.27	1. STRAIGHTNESS=1.7mm/M
UPTO 30.0mm – ±0.38	UPTO 100.0mm – ±0.80	UPTO 200.0mm – ±1.40	2. TWIST=1.7mm/M
UPTO 40.0mm – ±0.45	UPTO 120.0mm – ±0.90	UPTO 225.0mm – ±1.52	3. ANGULARITY= ±2°
UPTO 50.0mm – ±0.52	UPTO 140.0mm – ±1.00		4. FLATNESS =0.006xWIDTH
UPTO 60.0mm – ±0.60	UPTO 160.0mm – ±1.14		

JINDAL
SYMBOL OF QUALITY
AN ISO 9001 COMPANY

JINDAL ALUMINIUM LTD.
BANGALORE–560073 (INDIA)

	NAME	DATE
DRAWN	J.P.KAUSHIK	11–04–2019
CHECKED		
APPROVED	B.NATARAJA	07–05–2019

1. ALL DIMENSIONS ARE IN mm.
2. ROUND OFF ALL SHARP CORNERS WITH 0.40 mm.
3. TOLERANCES WILL BE AS PER IS:6477–1983 , UNLESS OTHERWISE SPECIFIED

SCALE	1:1
AREA mm^2	1204.404
PERIMETER mm.	726.835
WEIGHT kg/m	3.252

PARTY'S NAME	GLOBAL SYNDICATE, BANGALORE
PARTY'S DRAWING No.	AS PER DRAWING
ALLOY & TEMPER	6063 T6
DESCRIPTION	SILL TRANSOM SECTION

DRAWING No.	SECTION No.
P–19412	–
S6242	S6242
36128	36128