P−17371
S5472
36141

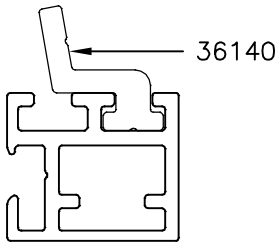

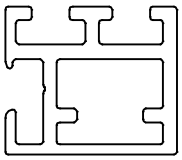

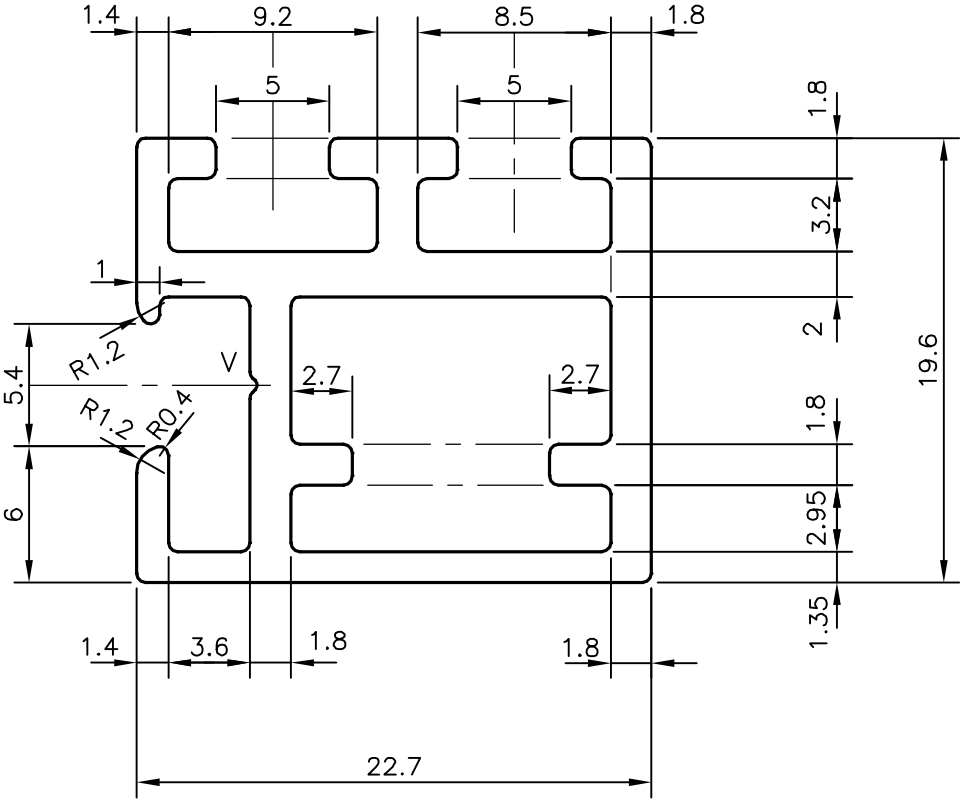

V = V GROOVE 0.3x90°(ONE PLACE)

TOLERANCES ON OVERALL WIDTHS & WIDTHS ACROSS FLATS OF BARS, & REGULAR SECTIONS

UPTO 6.40mm − ±0.20	UPTO 32.0mm − ±0.38	UPTO 120.0mm − ±0.85	UPTO 320.00mm − ±1.70
UPTO 10.0mm − ±0.23	UPTO 50.0mm − ±0.46	UPTO 160.0mm − ±1.02	
UPTO 12.0mm − ±0.25	UPTO 60.0mm − ±0.53	UPTO 200.0mm − ±1.14	
UPTO 16.0mm − ±0.28	UPTO 80.0mm − ±0.69	UPTO 250.0mm − ±1.40	
UPTO 25.0mm − ±0.30	UPTO 100.0mm − ±0.75	UPTO 300.0mm − ±1.65	

JINDAL

SYMBOL OF QUALITY
AN ISO 9001 COMPANY

JINDAL ALUMINIUM LTD.

BANGALORE−560073 (INDIA)

	NAME	DATE
DRAWN	J.P.KAUSHIK	02−08−2017
CHECKED		
APPROVED	*B.NATARAJA*	09−08−2017

1. ALL DIMENSIONS ARE IN mm.
2. ROUND OFF ALL SHARP CORNERS WITH 0.40 mm.
3. TOLERANCES WILL BE AS PER IS:6477−1983 UNLESS OTHERWISE SPECIFIED

SCALE	3:1
AREA mm^2	172.325
PERIMETER mm.	136.61
WEIGHT kg/m	0.465

PARTY'S NAME	GSC GLASS PVT. LTD., GREATER NOIDA
PARTY'S DRAWING No.	M34648 REV. B7
ALLOY & TEMPER	6063 T6
DESCRIPTION	CURTAIN WALL SECTION−SASH E72

DRAWING No.	SECTION No.
P−17371	−
S5472	S5472
36141	36141