P–17895
S5691
36172

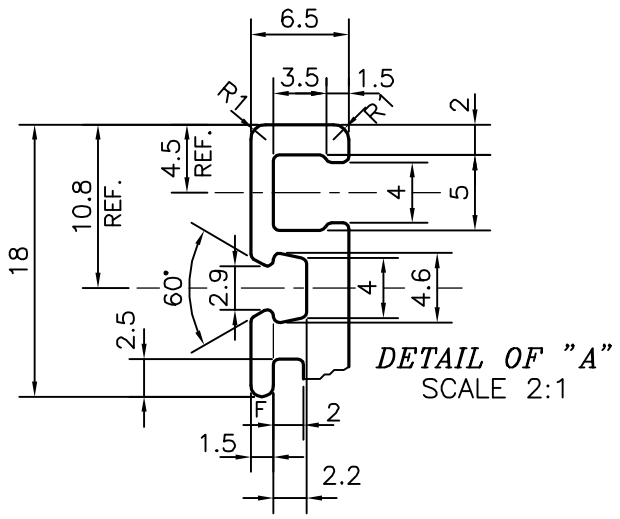

DETAIL OF "A"
SCALE 2:1

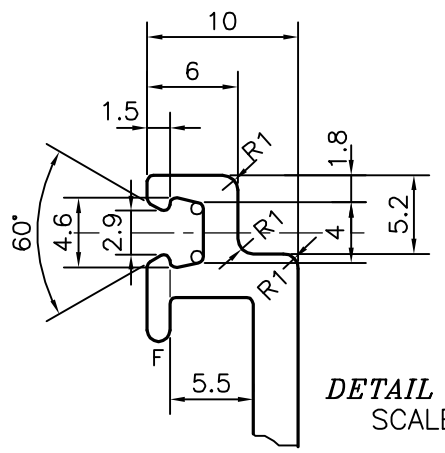

DETAIL OF "B"
SCALE 2:1

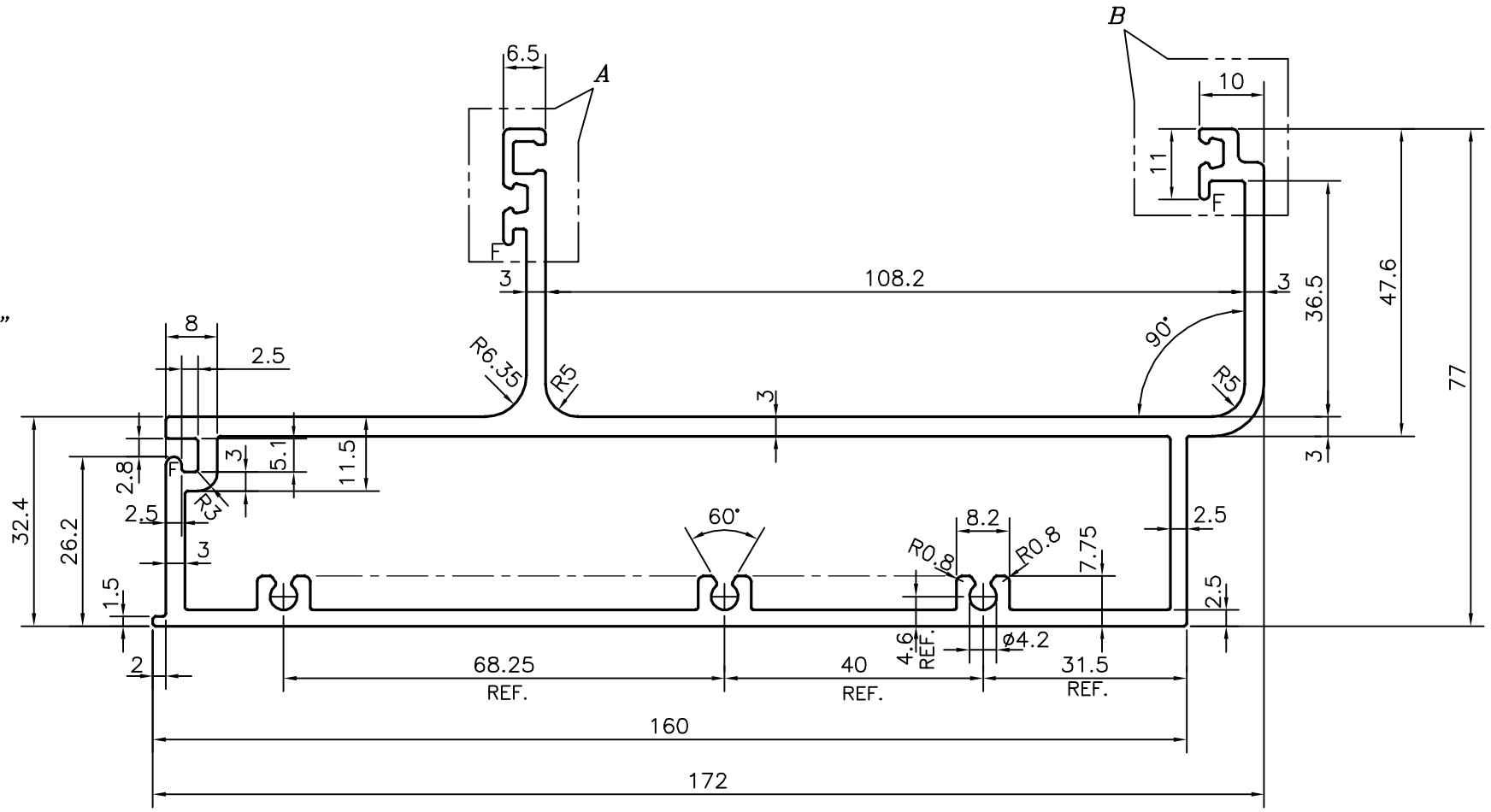

F = FULL RADIUS (3 PLACES)

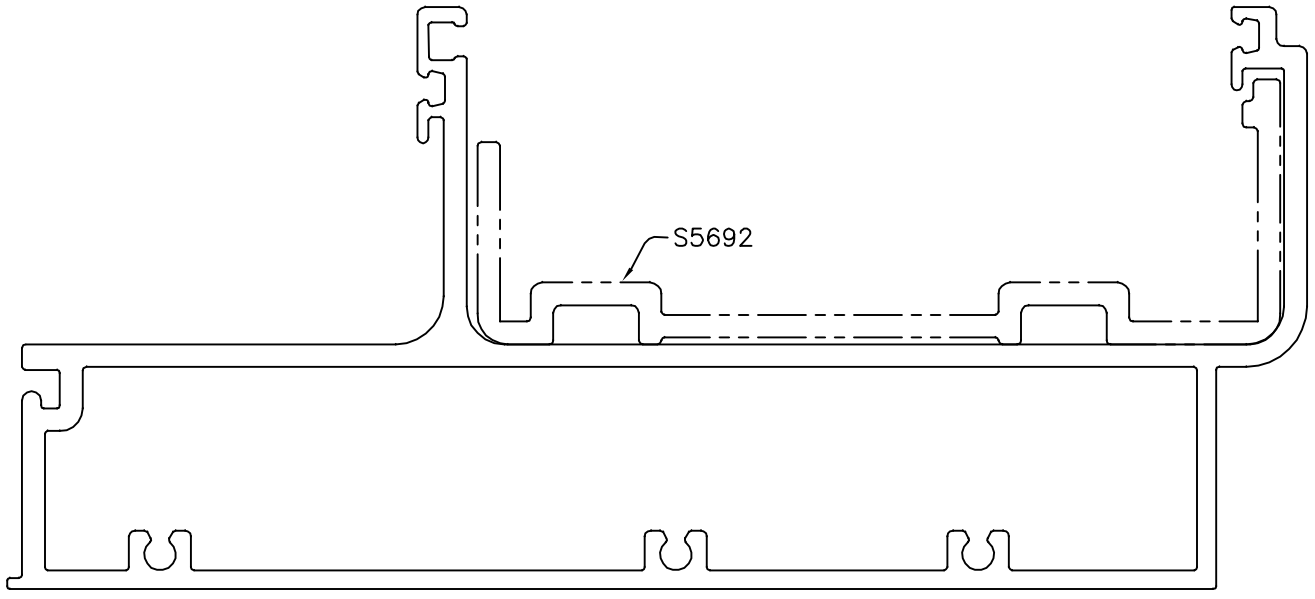

TOLERANCES ON OVERALL DIMENSIONS OF HOLLOW SECTIONS			
UPTO 20.0mm – ±0.30 UPTO 30.0mm – ±0.38 UPTO 40.0mm – ±0.45 UPTO 50.0mm – ±0.52 UPTO 60.0mm – ±0.60	UPTO 80.0mm – ±0.70 UPTO 100.0mm – ±0.80 UPTO 120.0mm – ±0.90 UPTO 140.0mm – ±1.00 UPTO 160.0mm – ±1.14	UPTO 180.0mm – ±1.27 UPTO 200.0mm – ±1.40 UPTO 225.0mm – ±1.52	1. STRAIGHTNESS=1.7mm/M 2. TWIST=1.7mm/M 3. ANGULARITY= ±2° 4. FLATNESS =0.006xWIDTH

JINDAL
SYMBOL OF QUALITY
AN ISO 9001 COMPANY

JINDAL ALUMINIUM LTD.
BANGALORE–560073 (INDIA)

1. ALL DIMENSIONS ARE IN mm.
2. ROUND OFF ALL SHARP CORNERS WITH 0.40 mm.
3. TOLERANCES WILL BE AS PER IS:6477–1983 UNLESS OTHERWISE SPECIFIED

	NAME	DATE
DRAWN	J.P.KAUSHIK	23–02–2018
CHECKED		
APPROVED	B.NATARAJ	28–02–2018
SCALE		1:1
AREA mm^2		1471.084
PERIMETER mm.		643.349
WEIGHT kg/m		3.972

PARTY'S NAME	KSV INFRABUILD, GURGAON
PARTY'S DRAWING No.	UCW–T1–160 05
ALLOY & TEMPER	6063 T6
DESCRIPTION	CURTAIN WALL SECTION

DRAWING No.	SECTION No.
P–17895	–
S5691	S5691
36172	36172