P−17738−1
S5723
36180

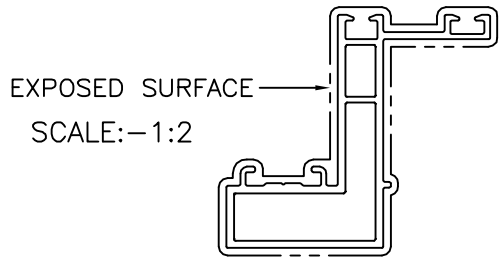

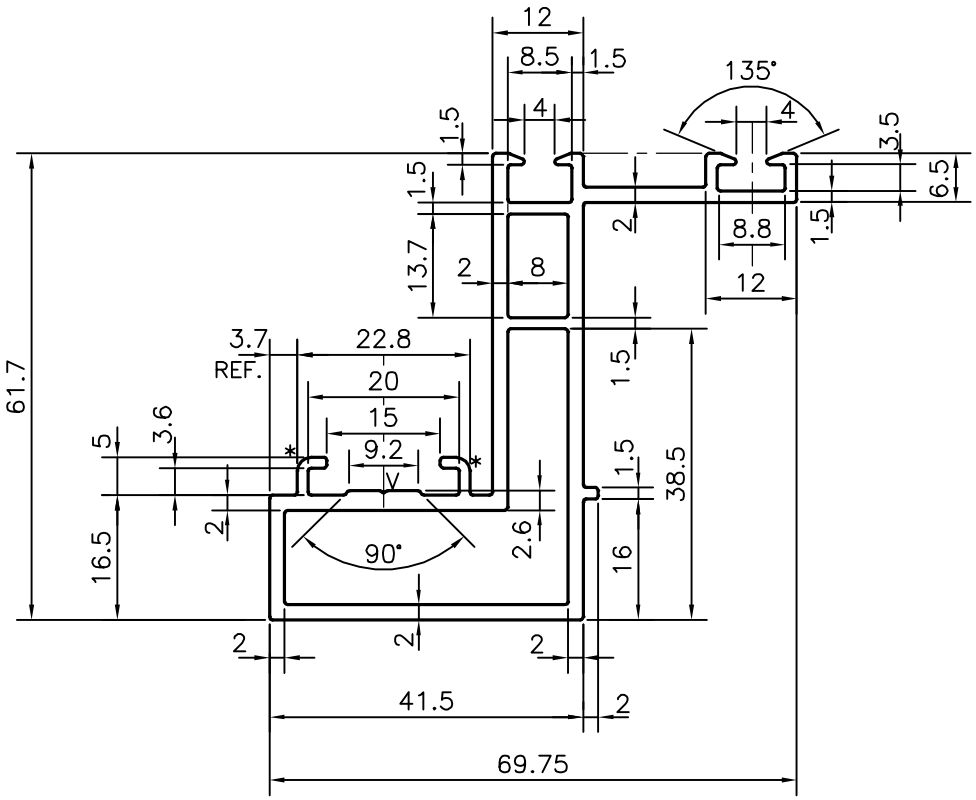

* = 1.8 RADIUS (2 PLACES)
V = V GROOVE 0.3x90°(ONE PLACE)

JINDAL SYMBOL OF QUALITY AN ISO 9001 COMPANY	*JINDAL ALUMINIUM LTD.* *BANGALORE−560073 (INDIA)*		NAME	DATE
		DRAWN	J.P.KAUSHIK	31−01−2018
		CHECKED		
		APPROVED	*B.NATARAJA*	17−03−2018
1. ALL DIMENSIONS ARE IN mm. 2. ROUND OFF ALL SHARP CORNERS WITH 0.40 mm. 3. TOLERANCES WILL BE AS PER,IS:6477−1983 UNLESS OTHERWISE SPECIFIED		SCALE		1:1
		AREA mm^2		506.565
		PERIMETER mm.		337.518
		WEIGHT kg/m		1.368
PARTY'S NAME	M.S. ENGINEERS, NEW DELHI	DRAWING No.		SECTION No.
PARTY'S DRAWING No.	AS PER DRAWING	P−17738−1		−
ALLOY & TEMPER	6063 T6	S5723		S5723
		36180		36180
DESCRIPTION	WINDOW SECTION−OPENABLE SHUTTER			