P-20271-3

36204

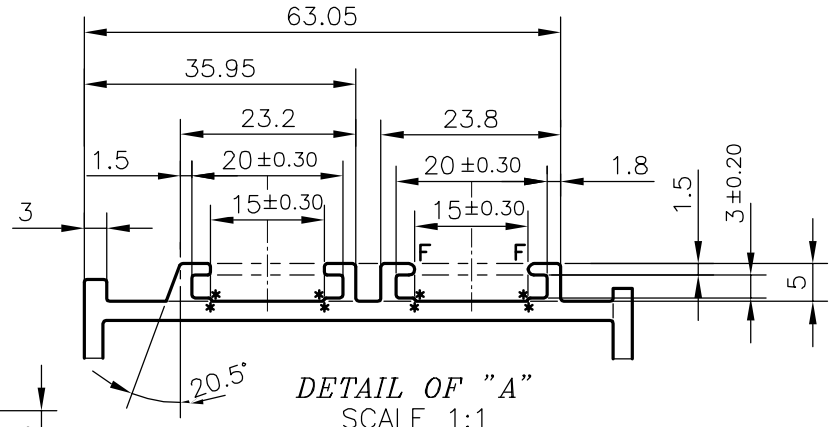

DETAIL OF "A"
SCALE 1:1

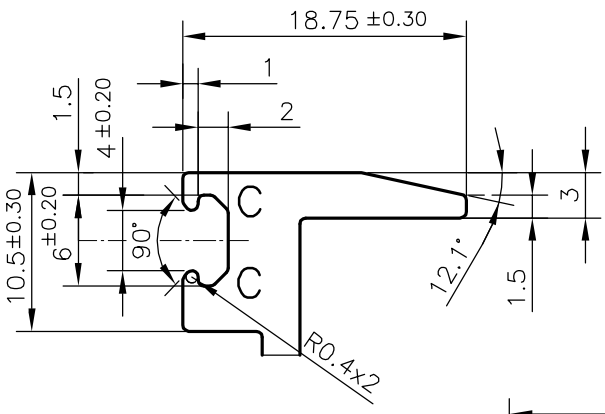

DETAIL OF "B"
SCALE 2:1

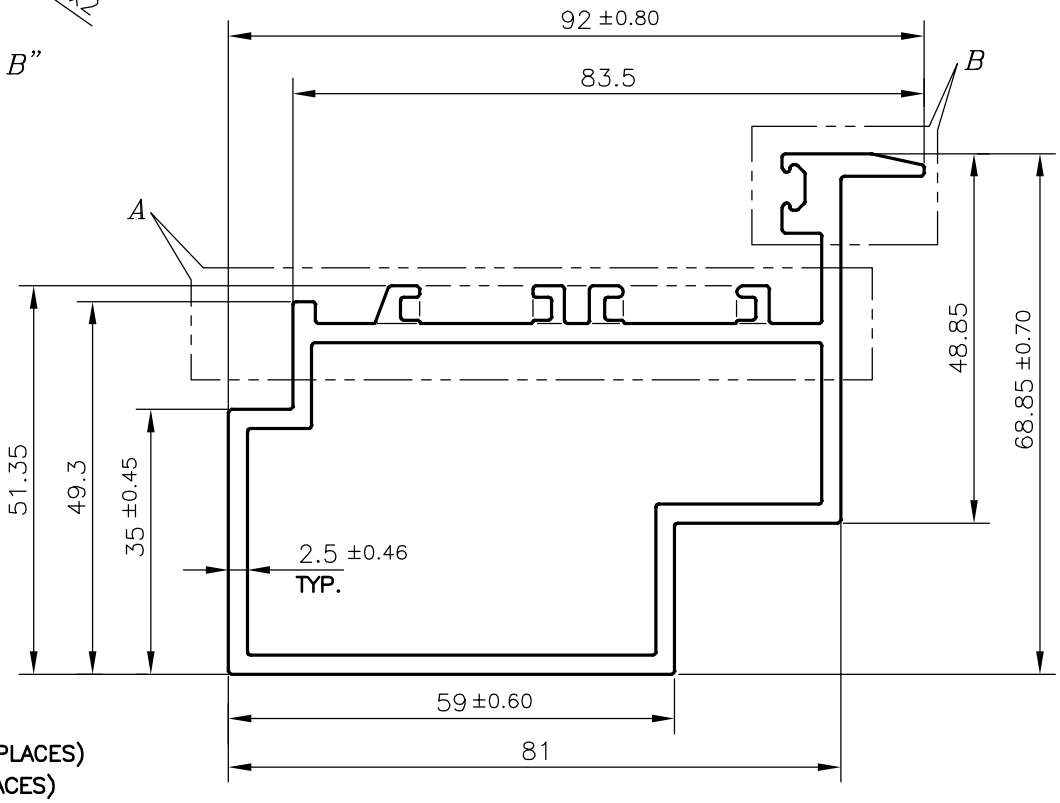

*=R0.3 (8 PLACES)
C=1x45° CHAMFER (2 PLACES)
F=FULL RADIUS (2 PLACES)

TOLERANCES ON OVERALL DIMENSIONS OF HOLLOW SECTIONS

UPTO 20.0mm – ±0.30	UPTO 80.0mm – ±0.70	UPTO 180.0mm – ±1.27	1. STRAIGHTNESS=1.7mm/M
UPTO 30.0mm – ±0.38	UPTO 100.0mm – ±0.80	UPTO 200.0mm – ±1.40	2. TWIST=1.7mm/M
UPTO 40.0mm – ±0.45	UPTO 120.0mm – ±0.90	UPTO 225.0mm – ±1.52	3. ANGULARITY= ±2°
UPTO 50.0mm – ±0.52	UPTO 140.0mm – ±1.00		4. FLATNESS =0.006xWIDTH
UPTO 60.0mm – ±0.60	UPTO 160.0mm – ±1.14		

JINDAL
SYMBOL OF QUALITY
AN ISO 9001 COMPANY

JINDAL ALUMINIUM LTD.

BANGALORE-560073 (INDIA)

	NAME	DATE
DRAWN	DARPAN	18-11-2019
CHECKED		
APPROVED	B.NATARAJA	21-09-2020

1. ALL DIMENSIONS ARE IN mm.
2. ROUND OFF ALL SHARP CORNERS WITH 0.40 mm.
3. TOLERANCES WILL BE AS PER IS:6477-1983 , UNLESS OTHERWISE SPECIFIED

SCALE	1:1
AREA mm^2	803.888
PERIMETER mm.	394.529
WEIGHT kg/m	2.170

PARTY'S NAME	GLAZED TECHNO INDIA., MUMBAI.
PARTY'S DRAWING No.	AS PER AUTOCAD DRAWING & REQUIREMENT
ALLOY & TEMPER	6063 T6
DESCRIPTION	ALUMINIUM OUTER FRAME

DRAWING No.	SECTION No.
P-20271-3	–
36204	36204