P-22794-1
36329

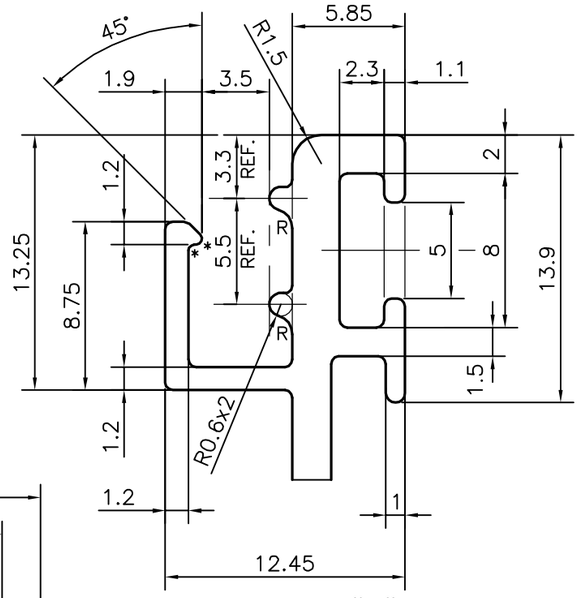

DETAIL OF "A"
SCALE:- 3:1

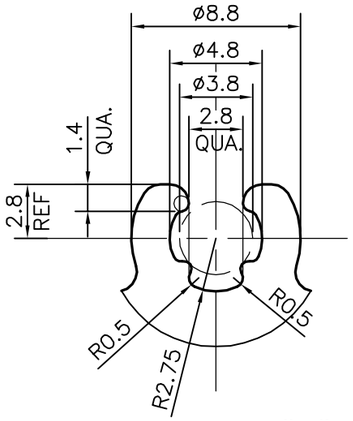

DETAIL OF "B"
SCALE:- 3:1

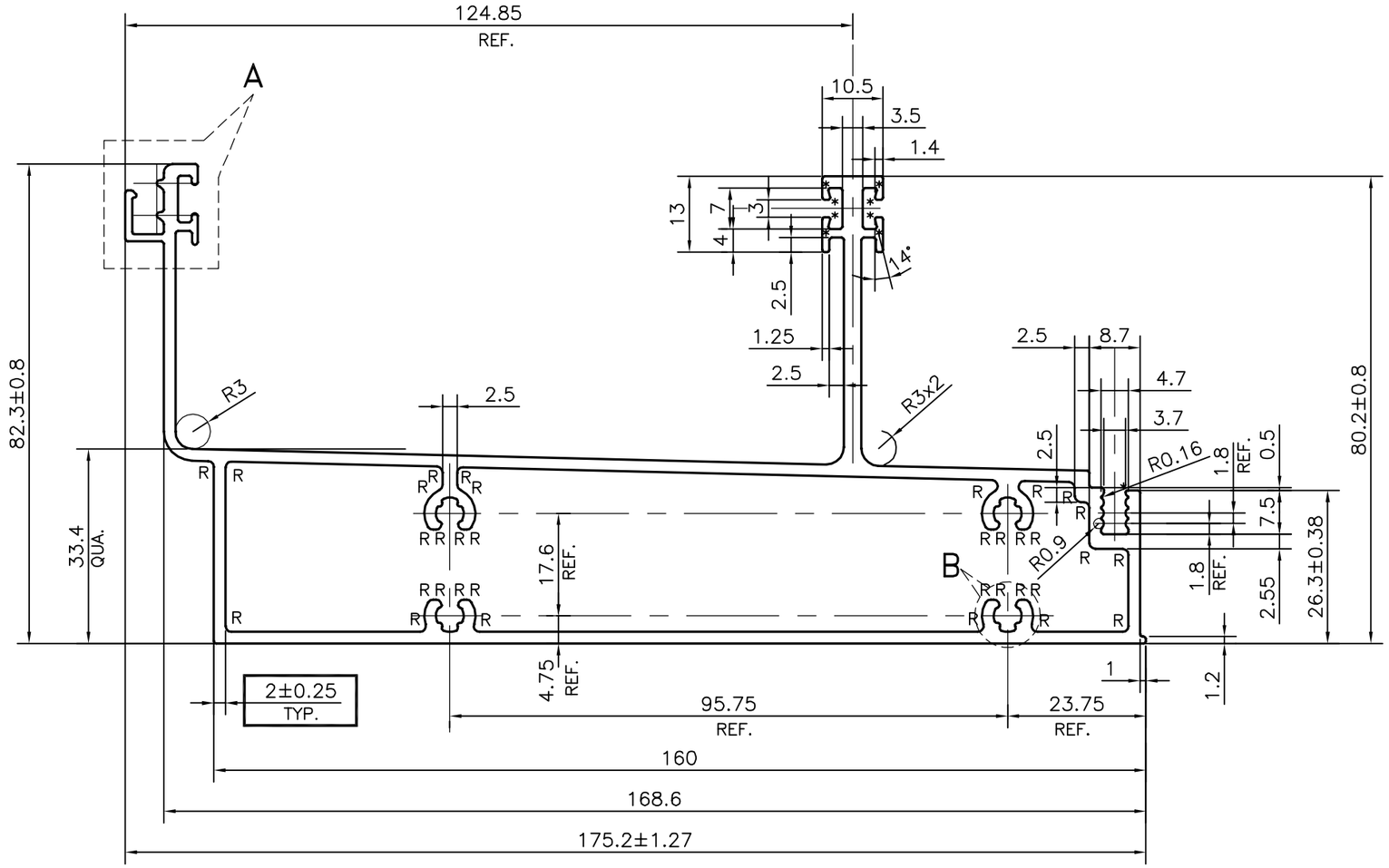

APPROXIMATE WEIGHT RANGE -2.979 - 3.830 kg/m

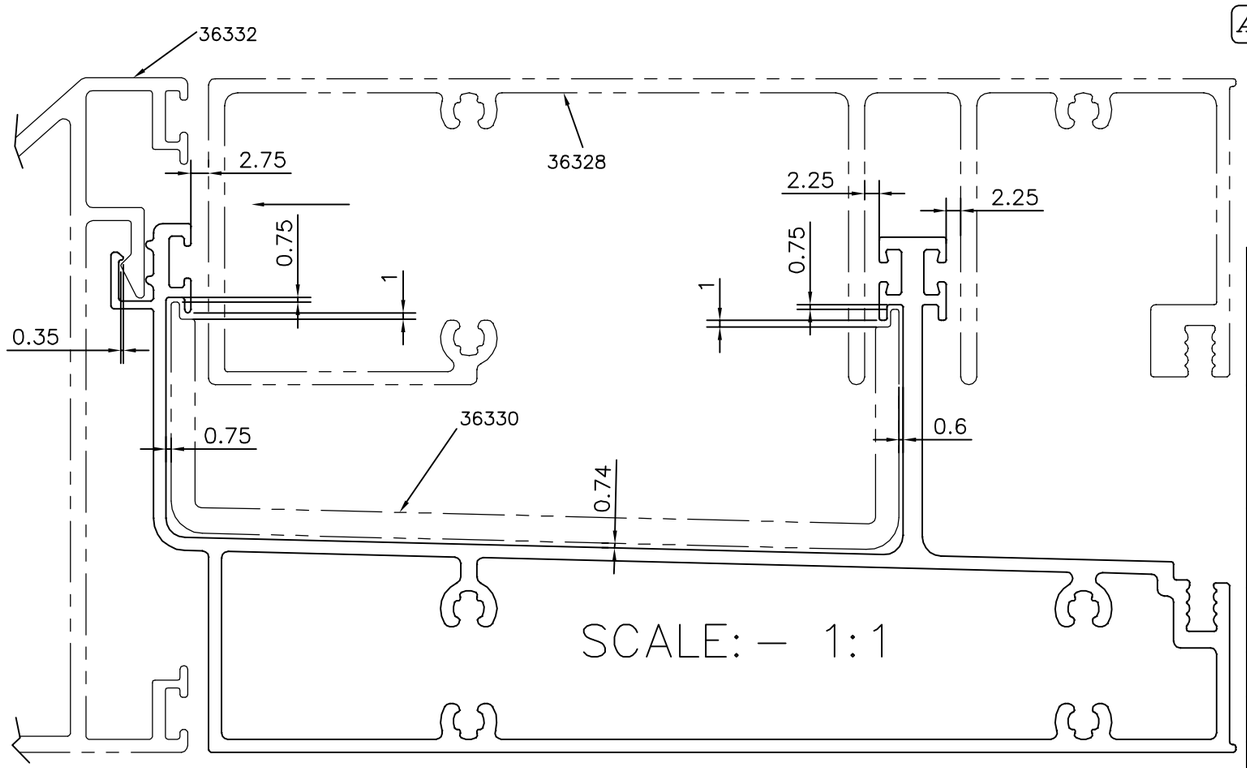

* = 0.3mm RADIUS (11 PLACES)
R = 1mm RADIUS (36 PLACES)

TOLERANCES ON OVERALL DIMENSIONS OF HOLLOW SECTIONS

UPTO 20.0mm - ±0.30	UPTO 80.0mm - ±0.70	UPTO 180.0mm - ±1.27	1. STRAIGHTNESS=1.7mm/M
UPTO 30.0mm - ±0.38	UPTO 100.0mm - ±0.80	UPTO 200.0mm - ±1.40	2. TWIST=1.7mm/M
UPTO 40.0mm - ±0.45	UPTO 120.0mm - ±0.90	UPTO 225.0mm - ±1.52	3. ANGULARITY= ±2°
UPTO 50.0mm - ±0.52	UPTO 140.0mm - ±1.00		4. FLATNESS =0.006xWIDTH
UPTO 60.0mm - ±0.60	UPTO 160.0mm - ±1.14		

JINDAL
SYMBOL OF QUALITY
AN ISO 9001 COMPANY

JINDAL ALUMINIUM LTD.
BANGALORE-560073 (INDIA)

	NAME	DATE
DRAWN	DARPAN	28-07-2021
CHECKED		
APPROVED	B.NATARAJA	06/08/2021

1. ALL DIMENSIONS ARE IN mm.
2. ROUND OFF ALL SHARP CORNERS WITH 0.40 mm.
3. TOLERANCES WILL BE AS PER IS:6477-1983 UNLESS OTHERWISE SPECIFIED

SCALE	1:1
AREA mm^2	1260.84
PERIMETER mm.	712.794
WEIGHT kg/m	3.404

PARTY'S NAME	AASTHA ALUMINIUM PVT. LTD., GURGAON
PARTY'S DRAWING No.	AA-JC-ST-05
ALLOY & TEMPER	6063 T6
DESCRIPTION	CURTAIN WALL SECTION - SILL TRANSOM

DRAWING No.	SECTION No.
P-22794-1	-
36329	36329