P–19951
S6457
36405

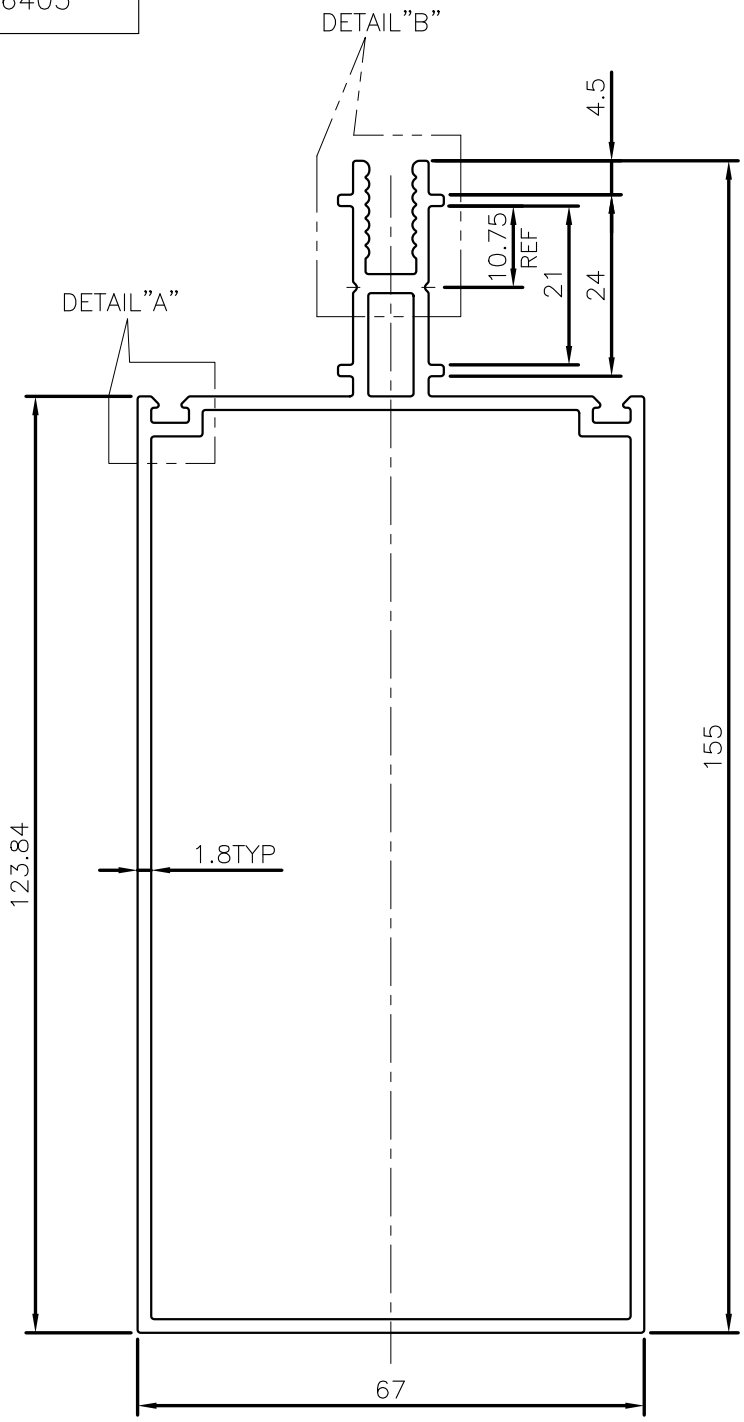

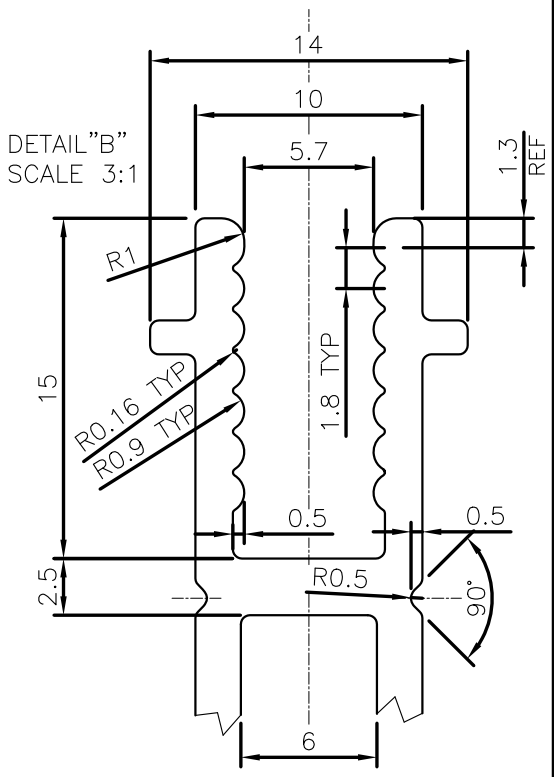

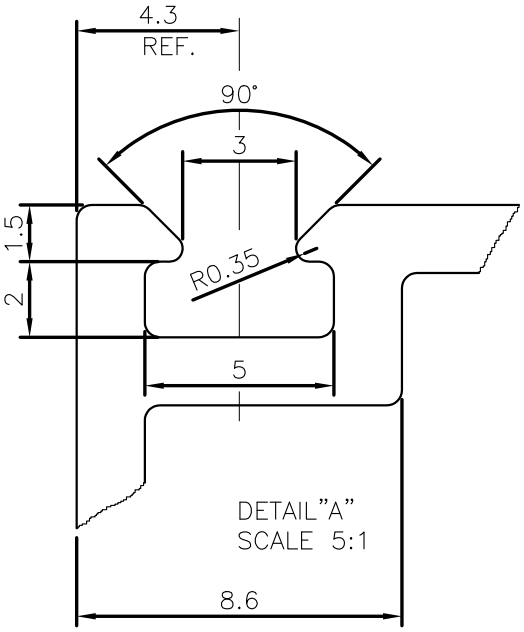

JINDAL SYMBOL OF QUALITY AN ISO 9002 COMPANY	*JINDAL ALUMINIUM LTD.* *BANGALORE–560073 (INDIA)*		NAME	DATE
		DRAWN	J.P.KAUSHIK	03–08–2019
		CHECKED		
		APPROVED	B.NATARAJA	20–08–2019
1. ALL DIMENSIONS ARE IN mm. 2. ROUND OFF ALL SHARP CORNERS WITH 0.40 mm. 3. TOLERANCES WILL BE AS PER IS:6477–1983 UNLESS OTHERWISE SPECIFIED		SCALE		1:1
		AREA mm^2		839.633
		PERIMETER mm.		508.444
PARTY'S NAME	AHLUWALIA CONSTRUCTION GROUP., GURGAON	WEIGHT kg/m		2.267
		DRAWING No.		SECTION No.
PARTY'S DRAWING No.	AS PER DRAWING	P–19951		–
		S6457		S6457
ALLOY & TEMPER	6063 T6	36405		36405
DESCRIPTION	CURTAIN WALL SECTION–MULLION			