IAL-D-820
–
36409

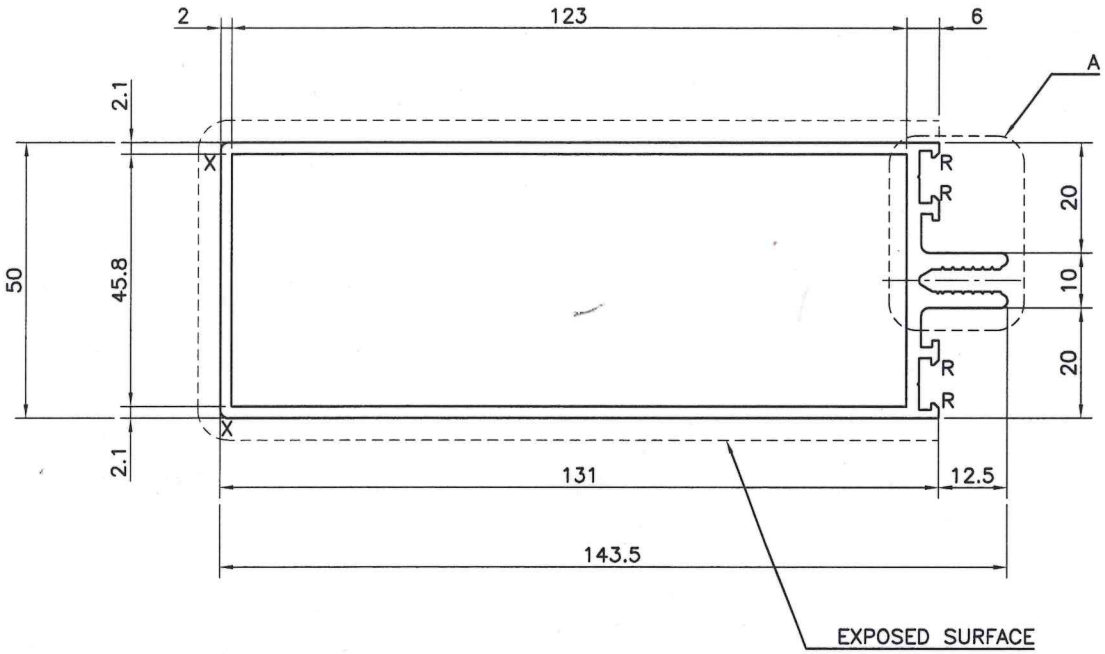

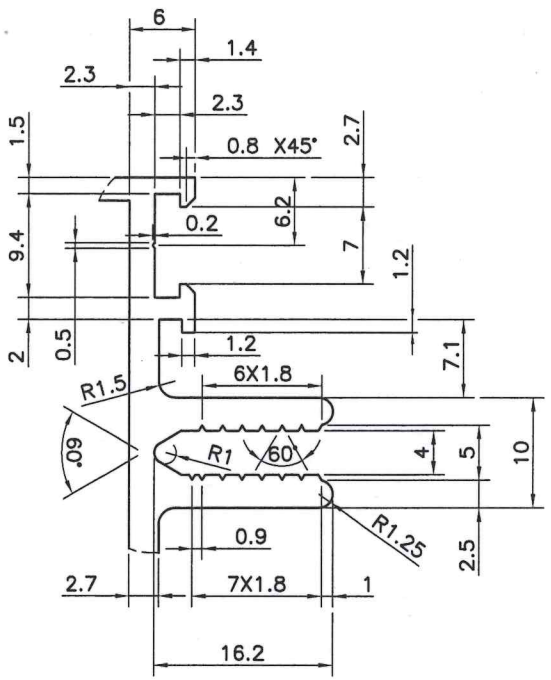

DETAIL A
SCALE 2:1

TWIST= ±1/4°/300M.M./M.
FLATNESS=WIDTHX0.005mm.
STRAIGHTNESS= 1.5 M.M./MTR.
ANGULARITY= ±1.5°

NOTE:-
R= CHEMFER: 0.8X45°
X= 1.50R

			NAME	DATE
SYMBOL OF QUALITY AN ISO 9001 COMPANY	*JINDAL ALUMINIUM LTD.* *BANGALORE-560073 (INDIA)*	DRAWN	*ASHUTOSH*	13-06-2022
		CHECKED		13-6-22
		APPROVED		13/06/22
1. ALL DIMENSIONS ARE IN mm. 2. ROUND OFF ALL SHARP CORNERS WITH 0.40 mm. 3. TOLERANCES WILL BE AS PER IS:6477-1983 , UNLESS OTHERWISE SPECIFIED		SCALE		1:1&2:1
		AREA mm^2		889.26
		PERIMETER mm.		461.5
PARTY'S NAME	M/S. AAP DIVISION	WEIGHT kg/m		2.401
		DRAWING No.		SECTION No.
PARTY'S DRAWING No.	AS PER DRAWING	IAL-D-820		36409
ALLOY & TEMPER	HE 9WP			
DESCRIPTION	CURTAIN WALL			