P-23274-1
36436

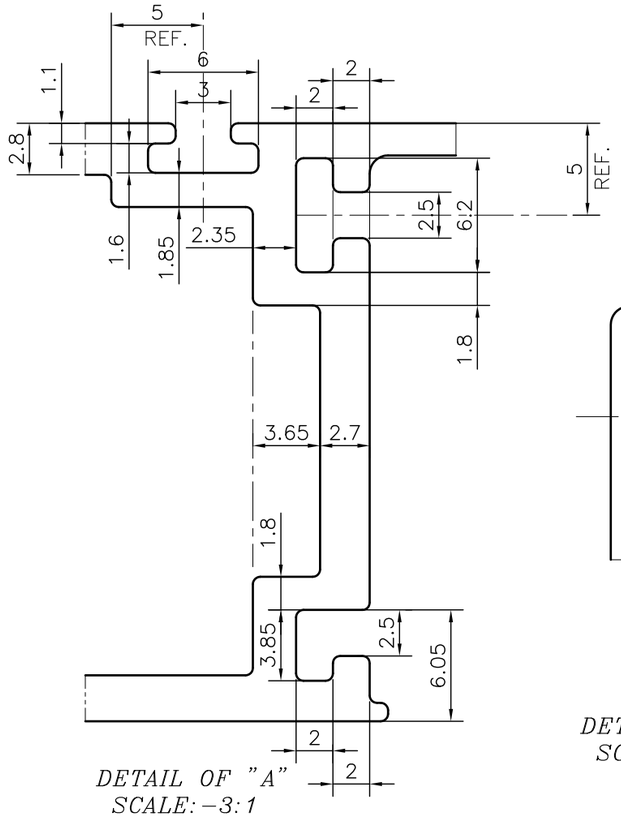

DETAIL OF "A"
SCALE:-3:1

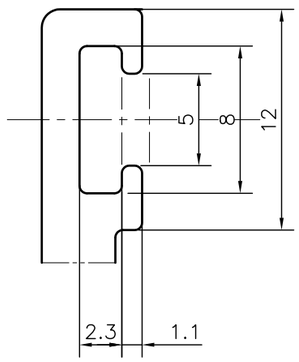

DETAIL OF "B"
SCALE:-3:1

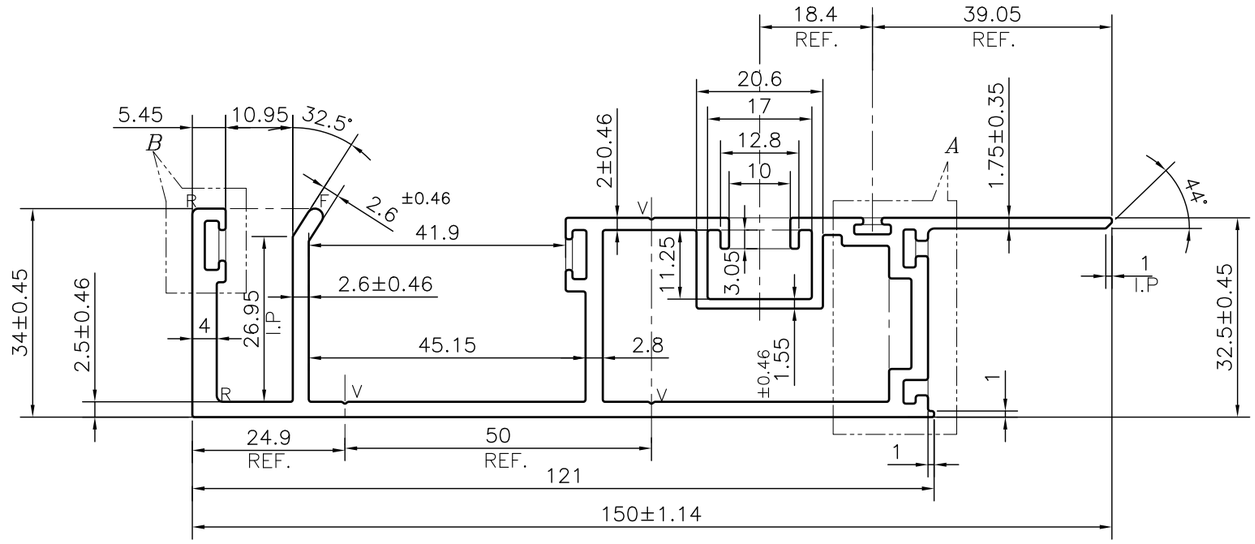

SCALE:- 1:1

APPROXIMATE WEIGHT RANGE -2.037 - 2.955 kg/m

V = "V "GROOVE 0.3X90° (3 PLACES)
R = 1mm RADIUS (2 PLACES)
F = FULL RADIUS (1 PLACE)

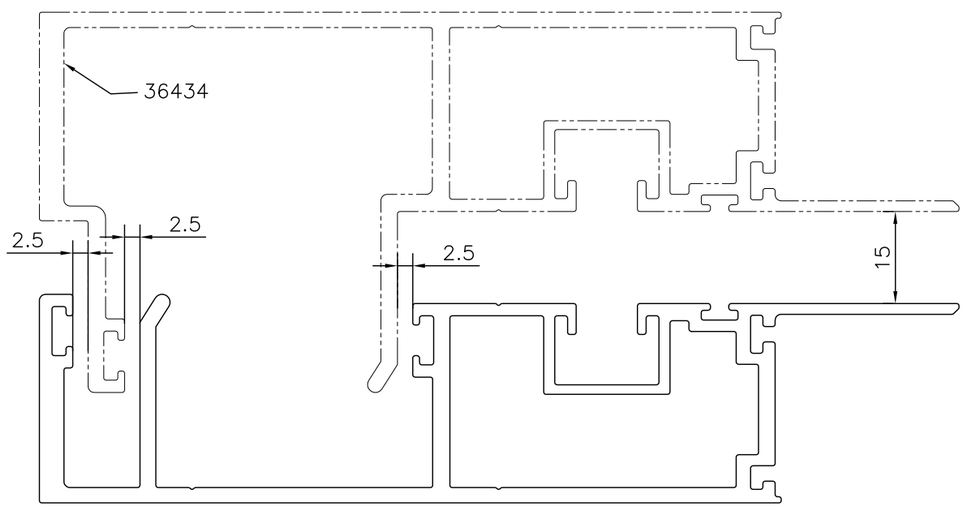

ASSEMBLY
SCALE:- 1:1

TOLERANCES ON OVERALL DIMENSIONS OF HOLLOW SECTIONS

UPTO 20.0mm - ±0.30	UPTO 80.0mm - ±0.70	UPTO 180.0mm - ±1.27
UPTO 30.0mm - ±0.38	UPTO 100.0mm - ±0.80	UPTO 200.0mm - ±1.40
UPTO 40.0mm - ±0.45	UPTO 120.0mm - ±0.90	UPTO 225.0mm - ±1.52
UPTO 50.0mm - ±0.52	UPTO 140.0mm - ±1.00	
UPTO 60.0mm - ±0.60	UPTO 160.0mm - ±1.14	

1. STRAIGHTNESS=1.7mm/M
2. TWIST=1.7mm/M
3. ANGULARITY= ±2°
4. FLATNESS =0.006xWIDTH

SYMBOL OF QUALITY
AN ISO 9001 COMPANY

JINDAL ALUMINIUM LTD.
BANGALORE-560073 (INDIA)

	NAME	DATE
DRAWN	PUNITH	24-12-2021
CHECKED		
APPROVED	B.NATARAJA	22-01-2022

1. ALL DIMENSIONS ARE IN mm.
2. ROUND OFF ALL SHARP CORNERS WITH 0.40 mm.
3. TOLERANCES WILL BE AS PER IS:6477-1983 UNLESS OTHERWISE SPECIFIED

SCALE	1:1
AREA mm^2	924.465
PERIMETER mm.	605.911
WEIGHT kg/m	2.496

PARTY'S NAME	AASTHA ALUMINIUM PVT. LTD., GURGAON
PARTY'S DRAWING No.	AS PER AUTOCAD DRAWING & REQUIREMENT
ALLOY & TEMPER	6063 T6
DESCRIPTION	CURTAIN WALL SECTION-MULLION FEMALE

DRAWING No.	SECTION No.
P-23274-1	-
36436	36436