IAL-D-4152
36446

NOTE: –

O=0.25R

R=0.50R

F=Full Radius

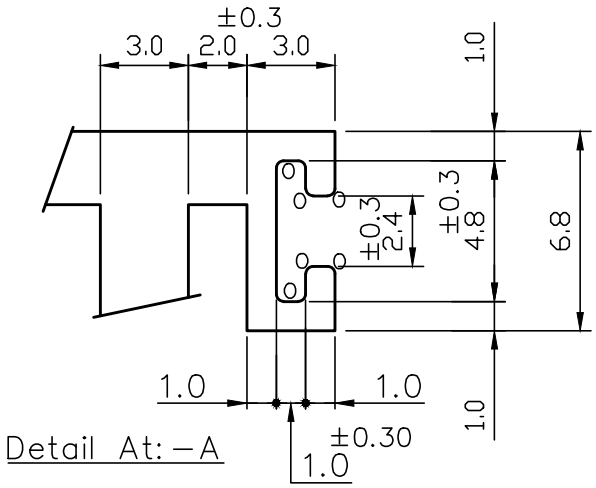

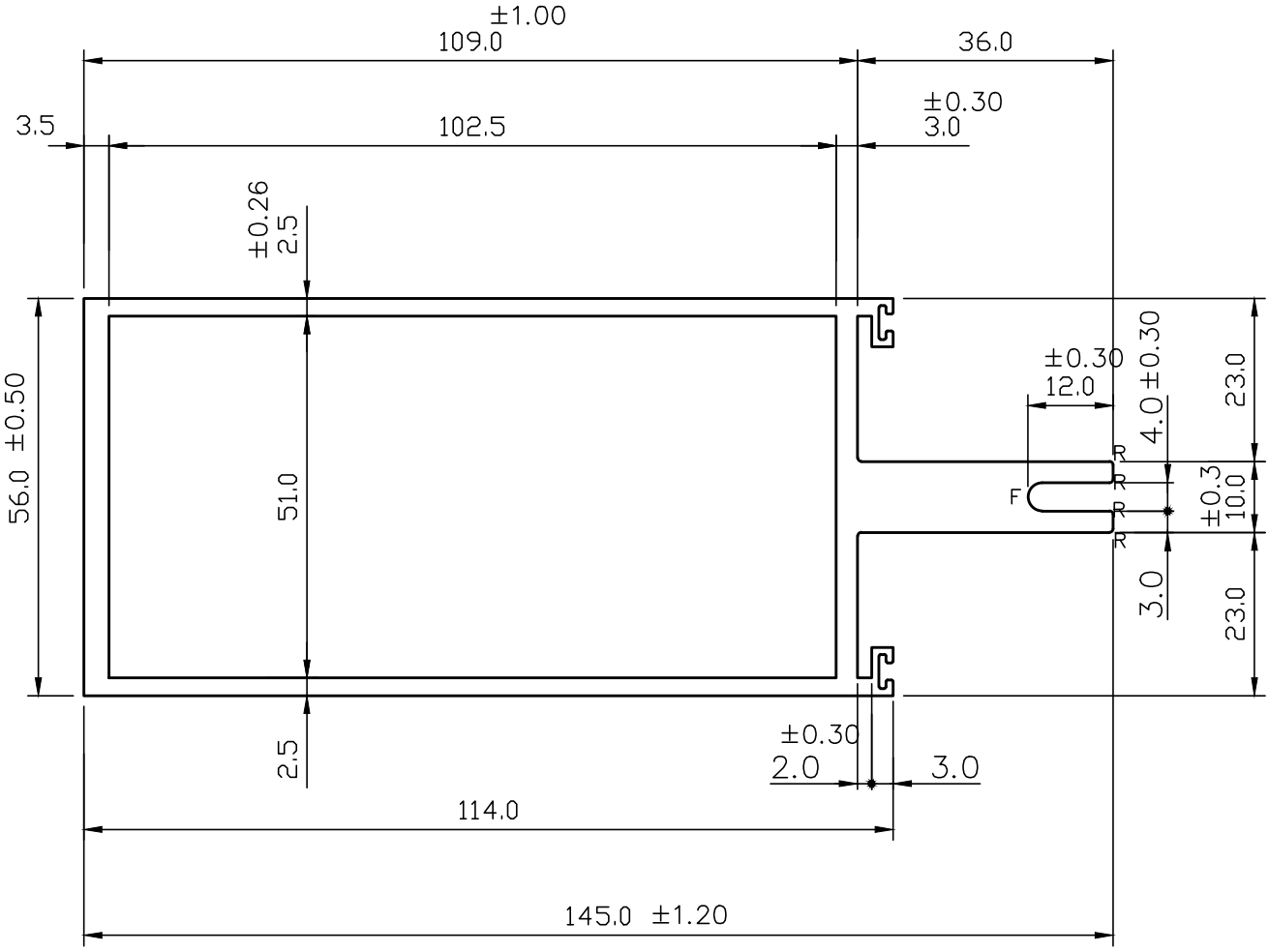

JINDAL SYMBOL OF QUALITY AN ISO 9001 COMPANY	*JINDAL ALUMINIUM LTD.* *BANGALORE–560073 (INDIA)*		NAME	DATE
		DRAWN	*S.K.SHARMA*	25–01–2022
		CHECKED		
		APPROVED		

1. ALL DIMENSIONS ARE IN mm.
2. ROUND OFF ALL SHARP CORNERS WITH 0.40 mm.
3. TOLERANCES WILL BE AS PER BS:EN–755–9 , UNLESS OTHERWISE SPECIFIED

SCALE	1:1
AREA mm^2	1226.5
PERIMETER mm.	476.0
WEIGHT kg/m	3.312

PARTY'S NAME	M/S.MILLENIUM
PARTY'S DRAWING No.	AS PER DRAWING
ALLOY & TEMPER	6063 T6
DESCRIPTION	CURTAIN WALL SECTION

DRAWING No.	SECTION No.
IAL–D–4152	–
36446	36446