IAL-D-3158

36451

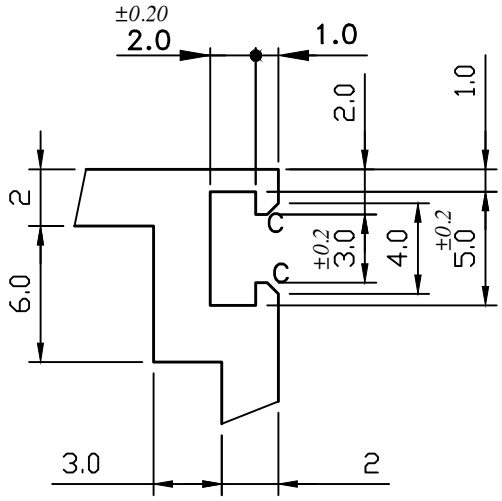

DETAIL AT = B

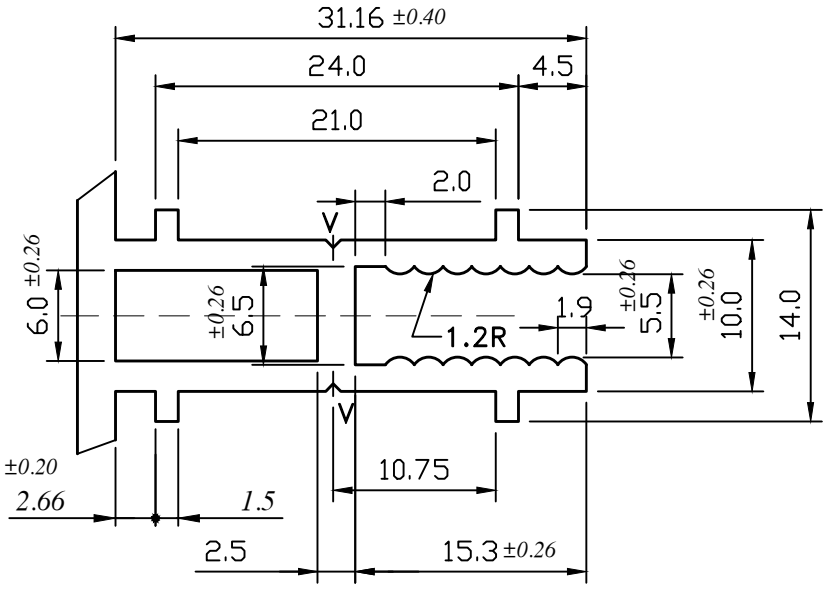

DETAIL AT = A

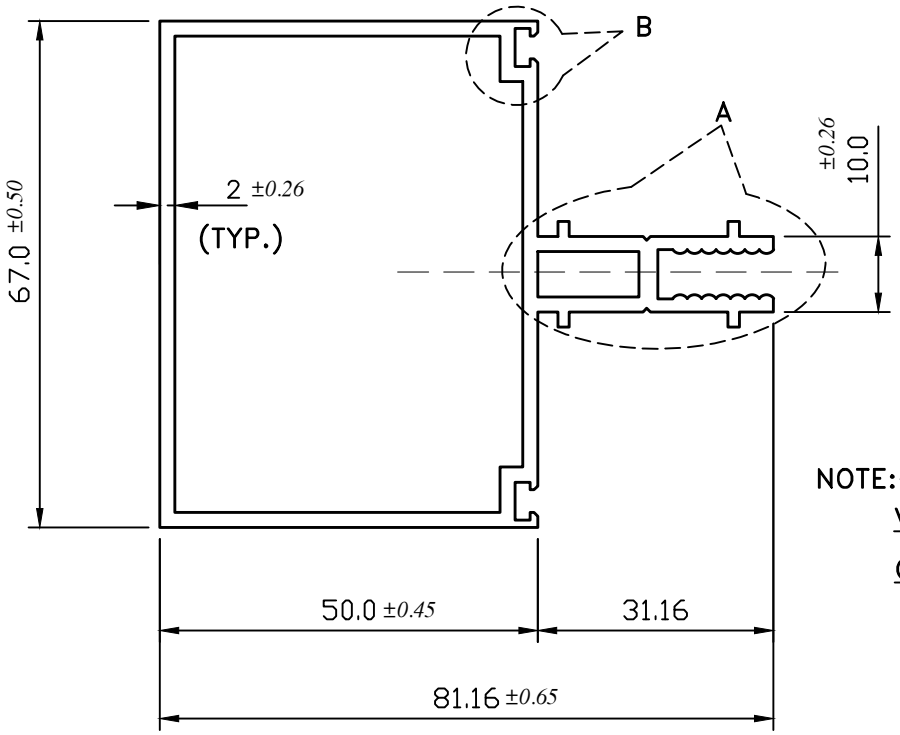

NOTE:-

V = 0.5X1.0X90°

C = CH. 0.5X45°

JINDAL SYMBOL OF QUALITY AN ISO 9001 COMPANY	JINDAL ALUMINIUM LTD. BANGALORE-560073 (INDIA)		NAME / DATE
		DRAWN	S.K.SHARMA 20-02-2022
		CHECKED	
		APPROVED	

1. ALL DIMENSIONS ARE IN mm.
2. ROUND OFF ALL SHARP CORNERS WITH 0.40 mm.
3. TOLERANCES WILL BE AS PER BS:EN-755-9 , UNLESS OTHERWISE SPECIFIED

SCALE	1:1&2:1
AREA mm²	615.0
PERIMETER mm.	367.5
WEIGHT kg/m	1.661

PARTY'S NAME	M/S.AAP DIVISION
PARTY'S DRAWING No.	AS PER DRAWING
ALLOY & TEMPER	6063-T6
DESCRIPTION	CURTAIN WALL SECTION

DRAWING No.	SECTION No.
IAL-D-3158	–
36451	36451