IAL-D-3161
36460

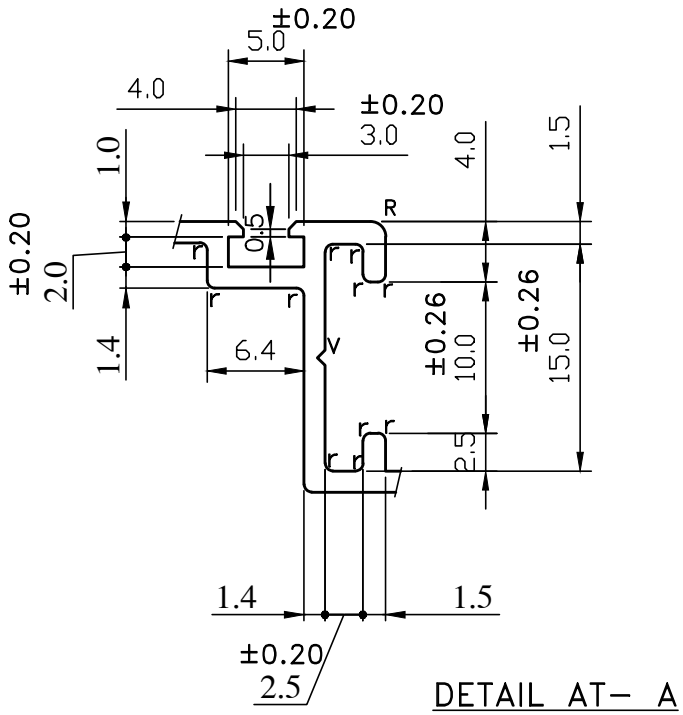

DETAIL AT- A

Note:-

X= 0.25R

r= 0.50R

R= 1.00R

V= 0.50X1.00X90°

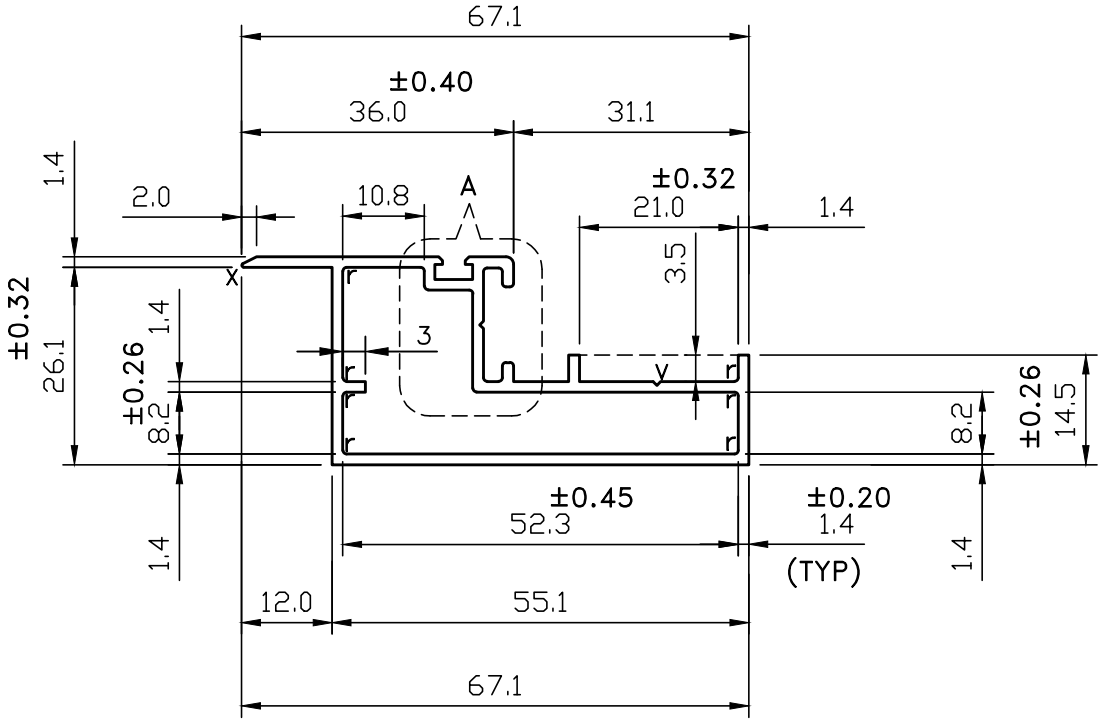

			NAME	DATE
SYMBOL OF QUALITY AN ISO 9001 COMPANY	*JINDAL ALUMINIUM LTD.* *BANGALORE-560073 (INDIA)*	DRAWN	*S.K.SHARMA*	11-03-2022
		CHECKED		
		APPROVED		

1. ALL DIMENSIONS ARE IN mm.
2. ROUND OFF ALL SHARP CORNERS WITH 0.40 mm.
3. TOLERANCES WILL BE AS PER BS:EN-755-9 , UNLESS OTHERWISE SPECIFIED

SCALE	1:1&2:1
AREA mm^2	272.5
PERIMETER mm.	223.0
WEIGHT kg/m	0.736

PARTY'S NAME	M/S. AAP DIVISION
PARTY'S DRAWING No.	AS PER DRAWING
ALLOY & TEMPER	6063-T6
DESCRIPTION	CURTAIN WALL SECTION

DRAWING No.	SECTION No.
IAL-D-3161	-
36460	36460