IAL–B–771
37138

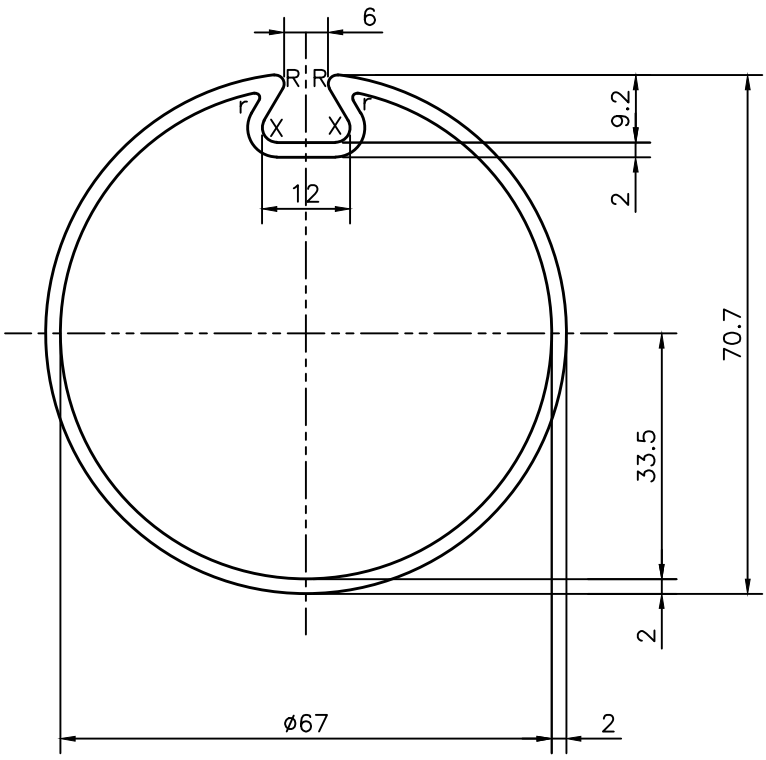

NOTE:–

R = 1.2R

r = 0.6R

X = 2.0R

JINDAL SYMBOL OF QUALITY AN ISO 9001 COMPANY	*JINDAL ALUMINIUM LTD.* *BANGALORE–560073 (INDIA)*		NAME	DATE
		DRAWN	*S.K.SHARMA*	01–02–2022
		CHECKED		
		APPROVED		
1. ALL DIMENSIONS ARE IN mm. 2. ROUND OFF ALL SHARP CORNERS WITH 0.40 mm. 3. TOLERANCES WILL BE AS PER BS:EN–755–9 , UNLESS OTHERWISE SPECIFIED		SCALE		1:1
		AREA mm^2		479.5
		PERIMETER mm.		246.3
		WEIGHT kg/m		1.295
PARTY'S NAME	M/S. GULF	DRAWING No.		SECTION No.
PARTY'S DRAWING No.	AS PER DRAWING	IAL–B–771		–
		37138		37138
ALLOY & TEMPER	6063 –T5			
DESCRIPTION	VENETION BLIND SECTION			