P-14115
S4321
38009

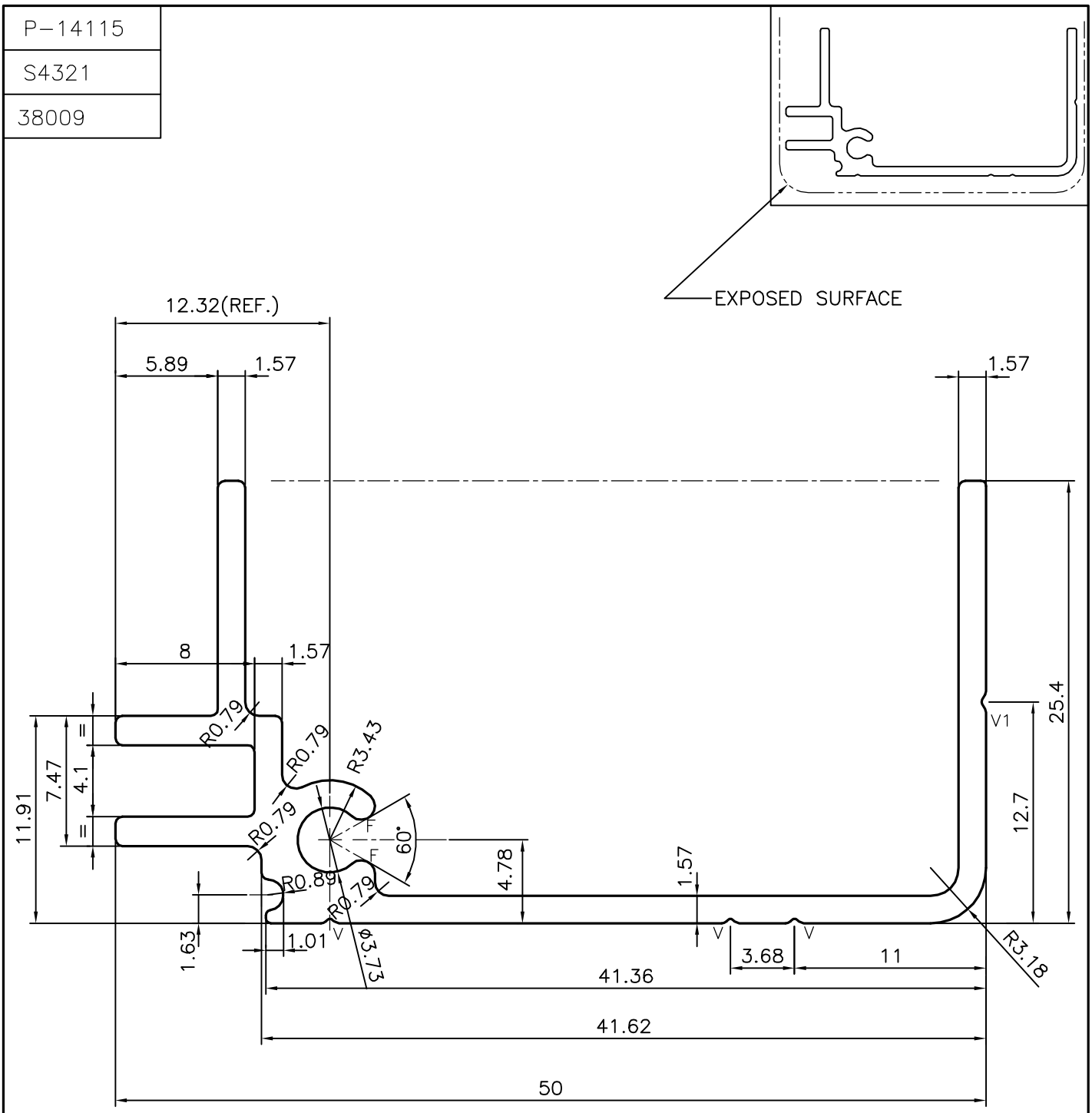

V1 = V GROOVE 0.25x120°
V = V GROOVE 0.25x90°(3 PLACES)
F = FULL RADIUS(2 PLACES)

SYMBOL OF QUALITY AN ISO 9001 COMPANY	***JINDAL ALUMINIUM LTD.*** *BANGALORE-560073 (INDIA)*		NAME / DATE
		DRAWN	J.P.KAUSHIK 21-11-2014
		CHECKED	
		APPROVED	B.NATARAJA 13-12-2014
1. ALL DIMENSIONS ARE IN mm. 2. ROUND OFF ALL SHARP CORNERS WITH 0.40 mm. 3. TOLERANCES WILL BE AS PER IS:3965-1981 , UNLESS OTHERWISE SPECIFIED		SCALE	3:1
		AREA mm^2	182.623
		PERIMETER mm.	218.53
		WEIGHT kg/m	0.493
PARTY'S NAME	SOCIETY FOR ENERGY,ENVIRONMENT & DEVELOPMENT, HYDERABAD	DRAWING No.	SECTION No.
PARTY'S DRAWING No.	AS PER DRAWING & REQUIRMENT	P-14115	–
ALLOY & TEMPER	HE9 WP	S4321	S4321
		38009	38009
DESCRIPTION	SOLAR SECTION		