P−15651
S5042
38014

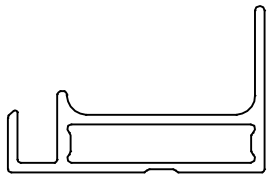

SCALE:− 1:1

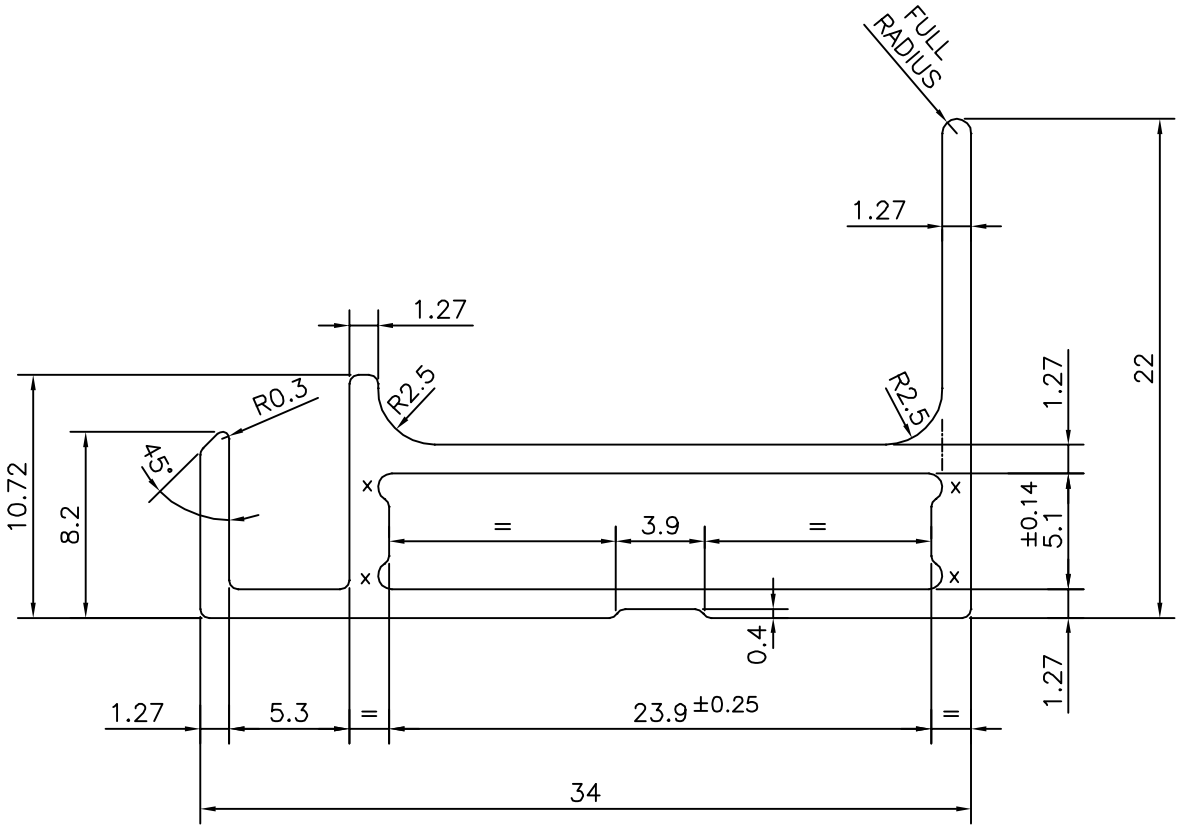

X = RADIUS 0.6 mm. (4 PLACES)

JINDAL SYMBOL OF QUALITY AN ISO 9001 COMPANY	JINDAL ALUMINIUM LTD. BANGALORE−560073 (INDIA)		NAME	DATE
		DRAWN	PARVESH	10−03−2016
		CHECKED		
		APPROVED	S.S. GARG	21−07−2016

1. ALL DIMENSIONS ARE IN mm.
2. ROUND OFF ALL SHARP CORNERS WITH 0.40 mm.
3. TOLERANCES WILL BE AS PER IS:6477−1983 , UNLESS OTHERWISE SPECIFIED

SCALE	3:1
AREA mm^2	125.706
PERIMETER mm.	127.934
WEIGHT kg/m	0.339

PARTY'S NAME	ALEENA SOLAR PVT. LTD., KOLKATA
PARTY'S DRAWING No.	MODIFIED OF SECTION No. 26272
ALLOY & TEMPER	6063 T6
DESCRIPTION	SOLAR SECTION

DRAWING No.	SECTION No.
P−15651	−
S5042	S5042
38014	38014