P–18539
S5972
38017

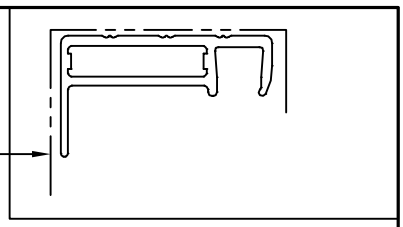

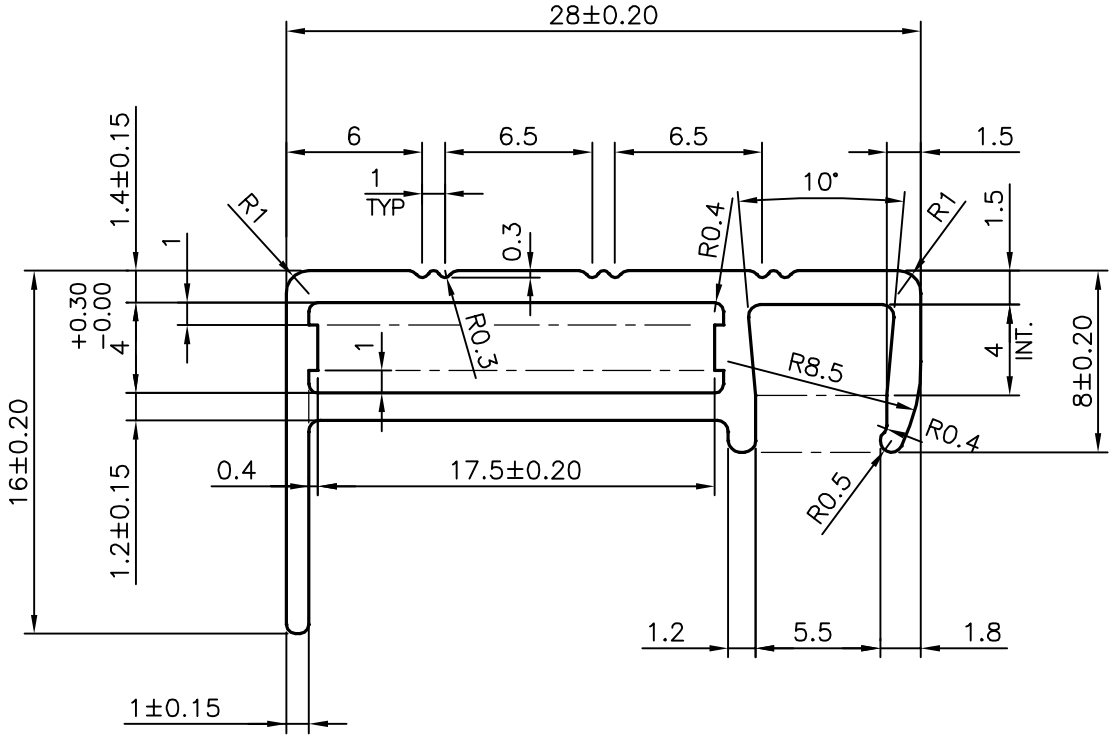

UNSPECIFIED RADIUS 0.5 mm

JINDAL SYMBOL OF QUALITY AN ISO 9001 COMPANY	*JINDAL ALUMINIUM LTD.* *BANGALORE–560073 (INDIA)*		NAME	DATE
		DRAWN	J.P.KAUSHIK	07–08–2018
		CHECKED		
		APPROVED	*B.NATARAJA*	03–09–2018
1. ALL DIMENSIONS ARE IN mm. 2. ROUND OFF ALL SHARP CORNERS WITH 0.40 mm. 3. TOLERANCES WILL BE AS PER IS:6477–1983 UNLESS OTHERWISE SPECIFIED		SCALE		3:1
		AREA mm^2		93.12
		PERIMETER mm.		102.495
PARTY'S NAME	SRI RAGHAVENDRA ENGINEERING WORKS, BANGALORE	WEIGHT kg/m		0.251
		DRAWING No.		SECTION No.
PARTY'S DRAWING No.	MODIFIED OF 38012	P–18539		–
		S5972		S5972
ALLOY & TEMPER	6063 T6	38017		38017
DESCRIPTION	SOLAR SECTION FRAME			