P–16118
38521
–

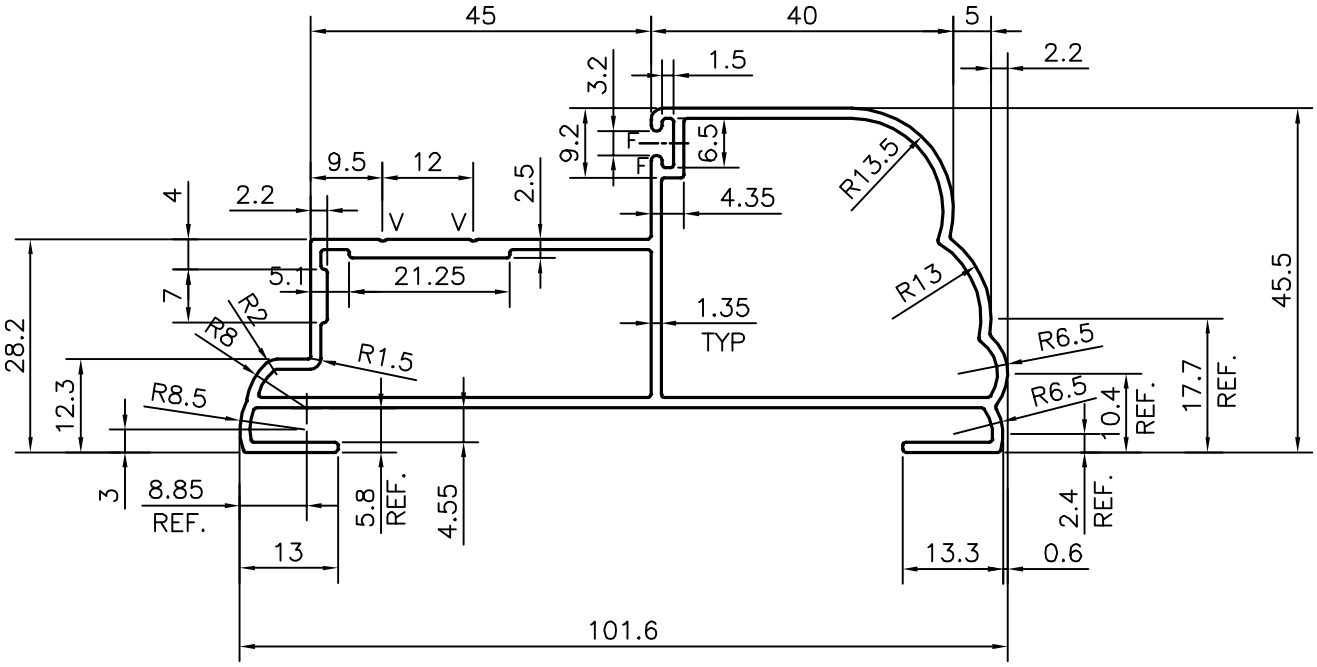

GENERAL WALL THICKNESS : 1.35mm
V GROOVE : 0.30x90° (2 PLACES)
F = FULL RADIUS (2 PLACES)

			NAME	DATE
JINDAL SYMBOL OF QUALITY AN ISO 9001 COMPANY	JINDAL ALUMINIUM LTD. BANGALORE–560073 (INDIA)	DRAWN	Kiran	21–07–2016
		CHECKED		
		APPROVED	S.S. GARG	02–08–2016

1. ALL DIMENSIONS ARE IN mm.
2. ROUND OFF ALL SHARP CORNERS WITH 0.40 mm.
3. TOLERANCES WILL BE AS PER IS:6477–1983, UNLESS OTHERWISE SPECIFIED

SCALE	1:1
AREA mm^2	466.177
PERIMETER mm.	345.588
WEIGHT kg/m	1.259

		DRAWING No.	SECTION No.
PARTY'S NAME	GENERAL CATEGORY, DELHI MARKET		
PARTY'S DRAWING No.	AS PER SAMPLE	P–16118	–
ALLOY & TEMPER	HE9 WP	38521	38521
DESCRIPTION	ARCHITECTURAL MISC. SECTION	–	–