P-12991-1
X1689
38534

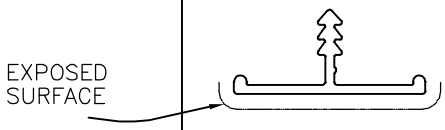

SCALE 1:1

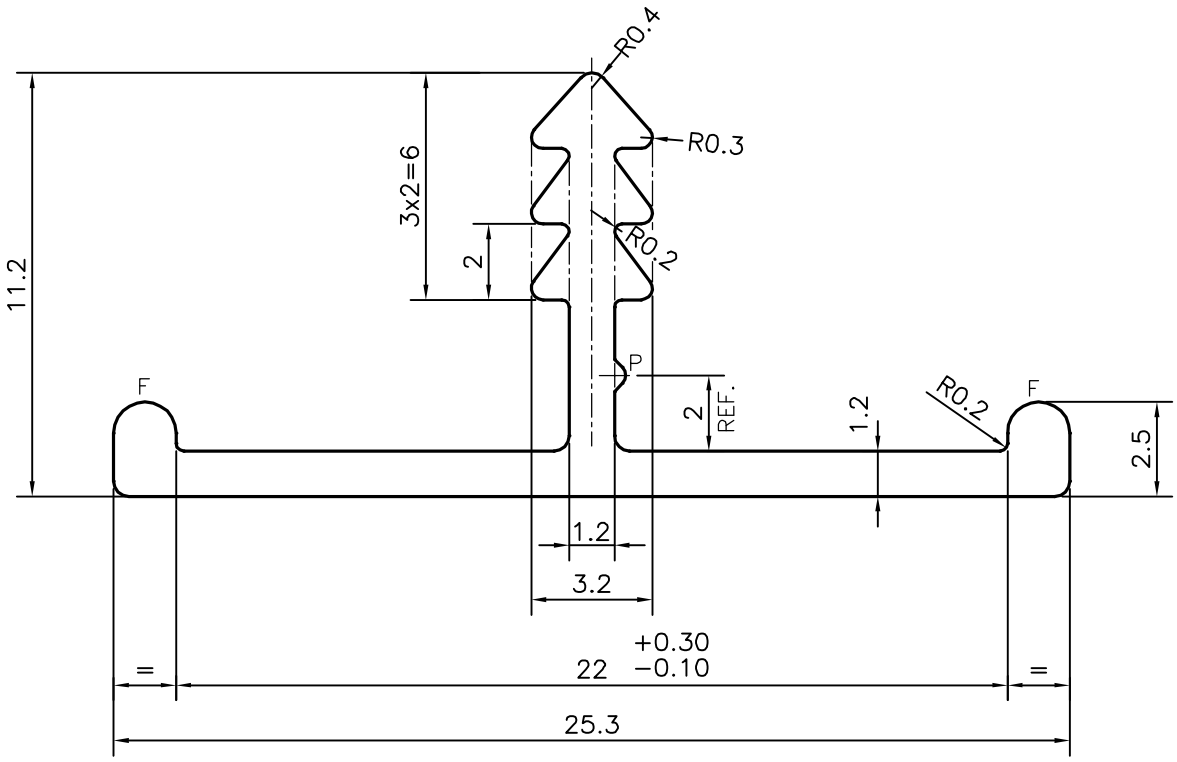

P = PIP 0.3x90° (1 PLACE)
F = FULL RADIUS (2 PLACES)

TOLERANCES ON OVERALL WIDTHS & WIDTHS ACROSS FLATS OF BARS, & REGULAR SECTIONS

UPTO 6.40mm − ±0.20	UPTO 32.0mm − ±0.38	UPTO 120.0mm − ±0.85	UPTO 320.00mm − ±1.70
UPTO 10.0mm − ±0.23	UPTO 50.0mm − ±0.46	UPTO 160.0mm − ±1.02	
UPTO 12.0mm − ±0.25	UPTO 60.0mm − ±0.53	UPTO 200.0mm − ±1.14	
UPTO 16.0mm − ±0.28	UPTO 80.0mm − ±0.69	UPTO 250.0mm − ±1.40	
UPTO 25.0mm − ±0.30	UPTO 100.0mm − ±0.75	UPTO 300.0mm − ±1.65	

JINDAL
SYMBOL OF QUALITY
AN ISO 9001 COMPANY

JINDAL ALUMINIUM LTD.

BANGALORE-560073 (INDIA)

	NAME	DATE
DRAWN	PARVESH	02-09-2013
CHECKED		
APPROVED	S.S.GARG	04-09-2013

1. ALL DIMENSIONS ARE IN mm.
2. ROUND OFF ALL SHARP CORNERS WITH 0.40 mm.
3. TOLERANCES WILL BE AS PER, IS:3965-1981 UNLESS OTHERWISE SPECIFIED

SCALE	5:1
AREA mm^2	52.178
PERIMETER mm.	82.329
WEIGHT kg/m	0.141

PARTY'S NAME	VISHWAKARMA ALUMINIUM HOUSE PVT. LTD., MUMBAI
PARTY'S DRAWING No.	MODIFIED OF SECTION NO.:- S3032
ALLOY & TEMPER	HE9 WP
DESCRIPTION	AL. CHANNEL

DRAWING No.	SECTION No.
P-12991-1	–
X1689	X1689
38534	38534