P–15503	
X1960	
38571	

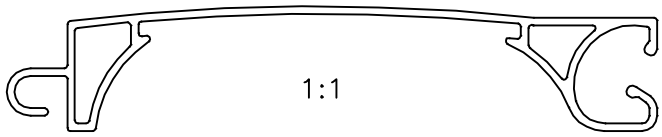

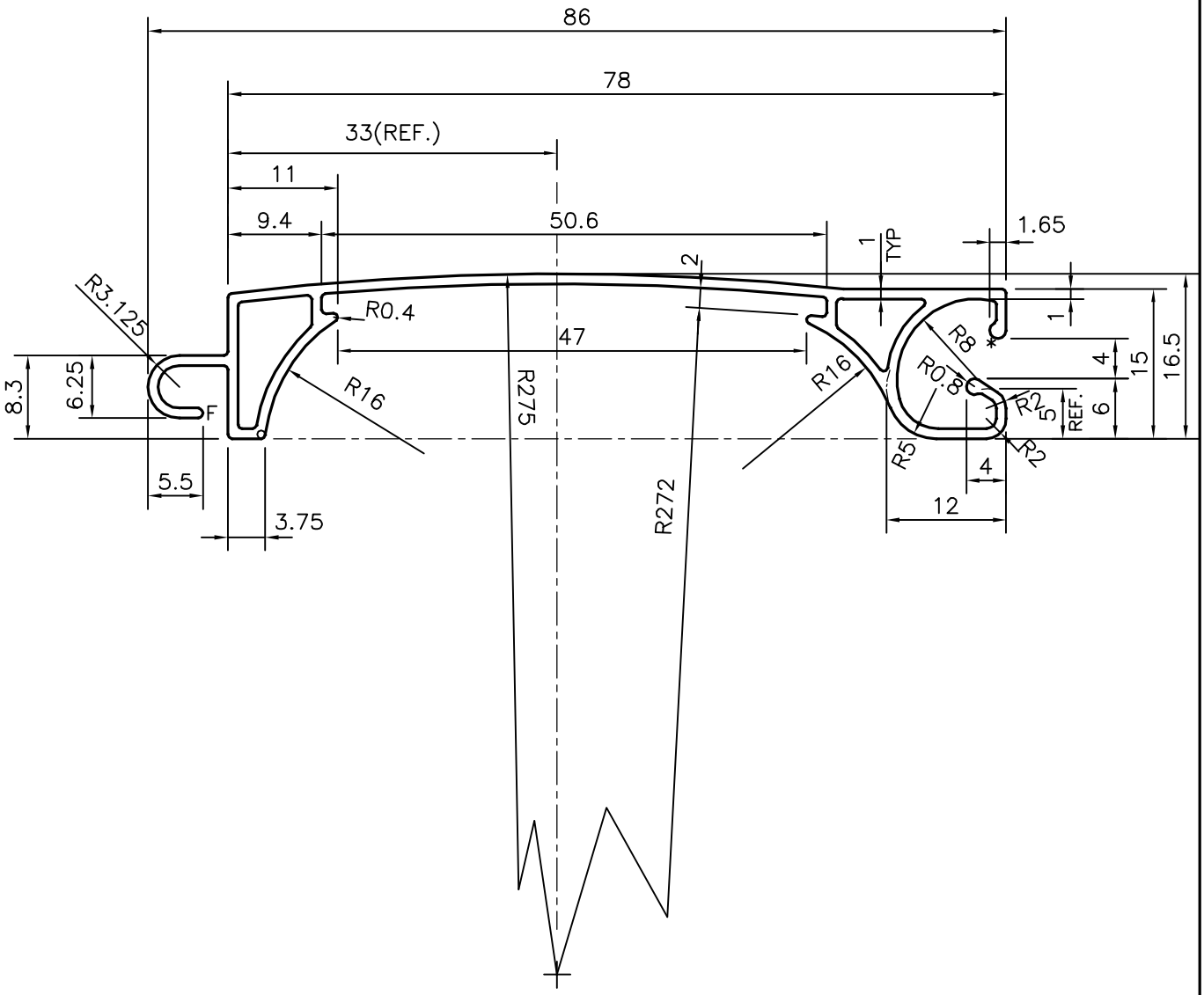

F = FULL RADIUS
* = 0.825 RADIUS

			NAME	DATE
JINDAL SYMBOL OF QUALITY AN ISO 9002 COMPANY	*JINDAL ALUMINIUM LTD.* *BANGALORE–560073 (INDIA)*	DRAWN	J.P.KAUSHIK	13–01–2016
		CHECKED		
		APPROVED	S.S.GARG	23–01–2016

1. ALL DIMENSIONS ARE IN mm.
2. ROUND OFF ALL SHARP CORNERS WITH 0.40 mm.
3. TOLERANCES WILL BE AS PER IS:6477–1983 UNLESS OTHERWISE SPECIFIED

SCALE	1.5:1
AREA mm^2	178.826
PERIMETER mm.	275.418
WEIGHT kg/m	0.483

		DRAWING No.	SECTION No.
PARTY'S NAME	ARIHANT ALUMINIUM CORPORATION, BANGALORE		
PARTY'S DRAWING No.	AS PER SAMPLE	P–15503	–
ALLOY & TEMPER	HE9 WP	X1960	X1960
		38571	38571
DESCRIPTION	MISC. SECTION		