P–14962–2
S4715
38594

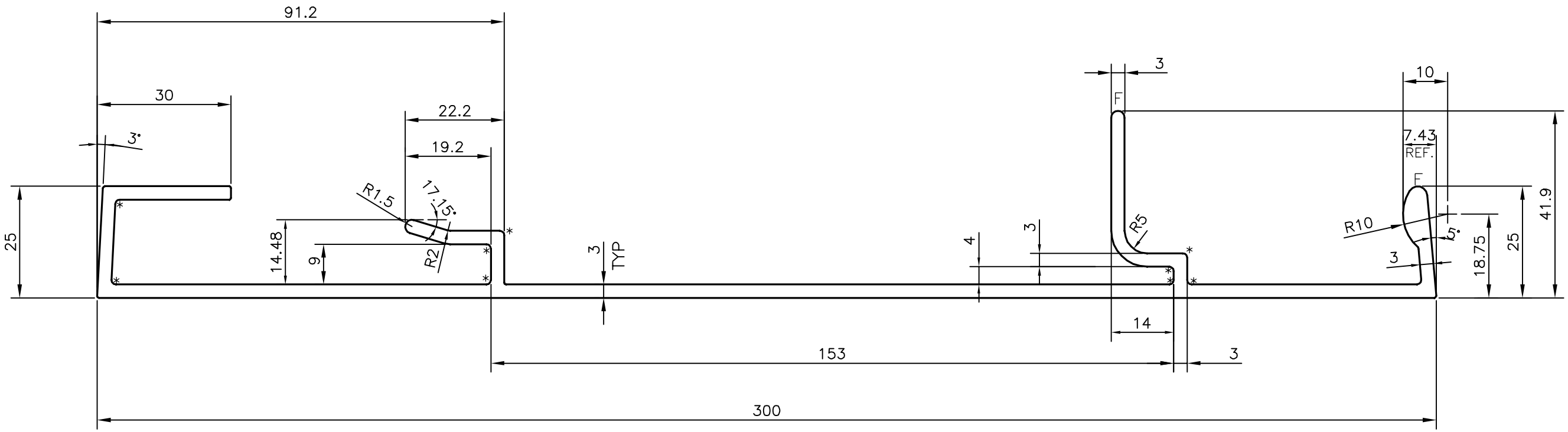

F = FULL RADIUS (2 PLACES)
* = R1.0 mm (9 PLACES)

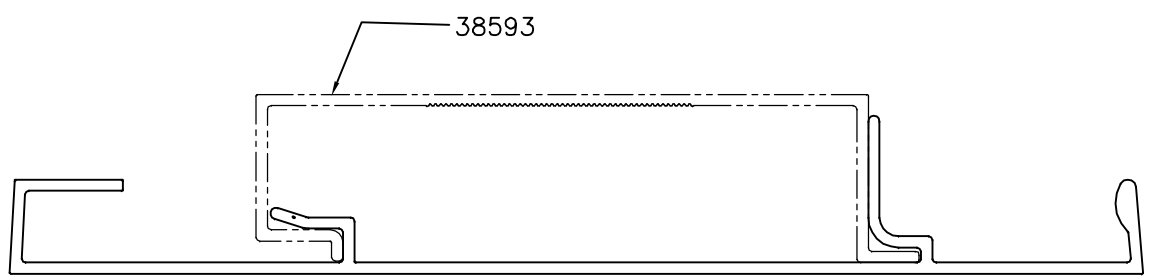

JINDAL SYMBOL OF QUALITY AN ISO 9001 COMPANY	*JINDAL ALUMINIUM LTD.* *BANGALORE–560073 (INDIA)*		NAME	DATE
		DRAWN	J.P.KAUSHIK	29–09–2015
		CHECKED		
		APPROVED	S.S.GARG	26–10–2015
1. ALL DIMENSIONS ARE IN mm. 2. ROUND OFF ALL SHARP CORNERS WITH 0.40 mm. 3. TOLERANCES WILL BE AS PER IS:3965–1981 UNLESS OTHERWISE SPECIFIED		SCALE		1:1
		AREA mm^2		1379.846
		PERIMETER mm.		901.428
		WEIGHT kg/m		3.726
PARTY'S NAME	ALUMAYER INDIA PVT. LTD., MUMBAI	DRAWING No.		SECTION No.
PARTY'S DRAWING No.	NCP–72	P–14962–2		–
ALLOY & TEMPER	6063 T6	S4715		S4715
		38594		38594
DESCRIPTION	MISC SECTION			