P-15921-2
X2020
38639

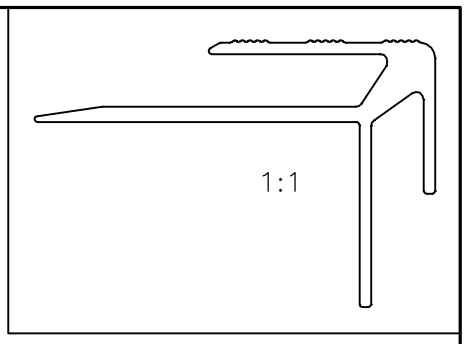

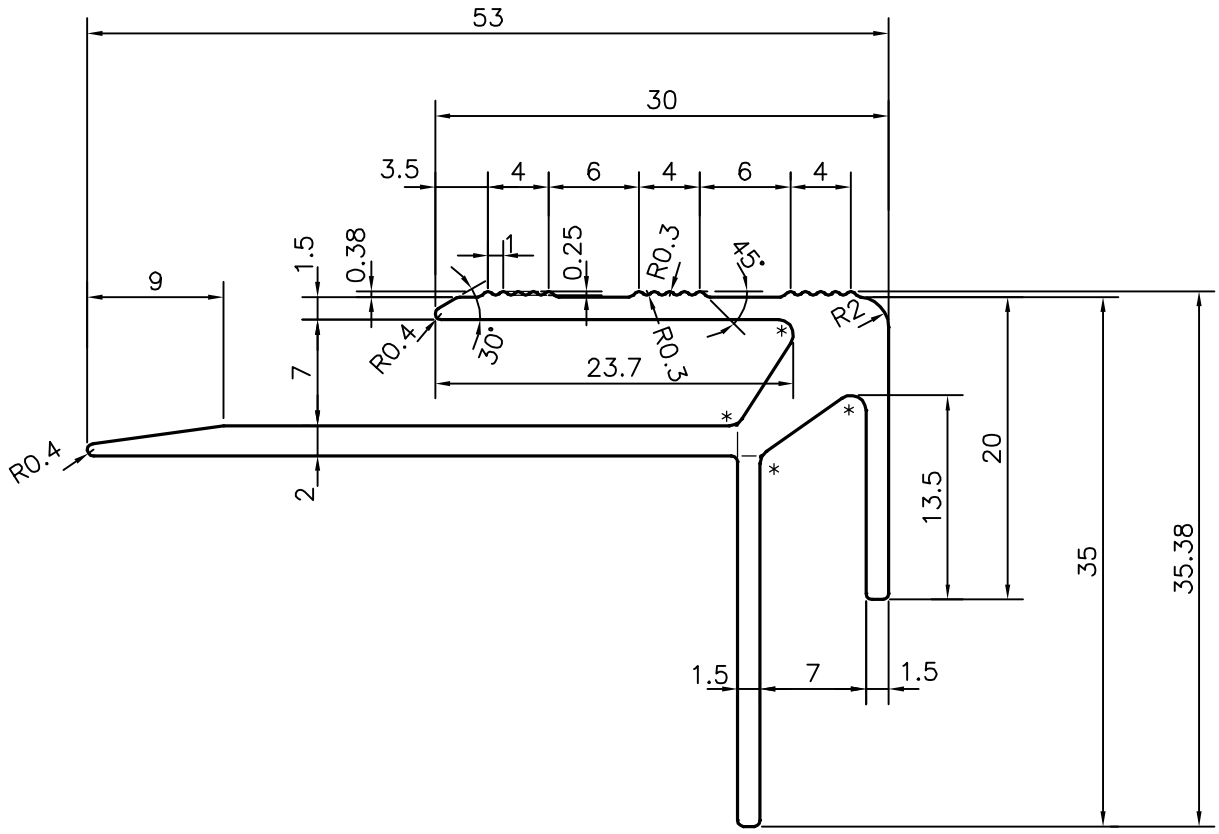

* = 1.0 RADIUS (4 PLACES)

JINDAL SYMBOL OF QUALITY AN ISO 9001 COMPANY	*JINDAL ALUMINIUM LTD.* *BANGALORE-560073 (INDIA)*		NAME	DATE
		DRAWN	J.P.KAUSHIK	06-06-2016
		CHECKED		
		APPROVED	S.S. GARG	13-06-2016
1. ALL DIMENSIONS ARE IN mm. 2. ROUND OFF ALL SHARP CORNERS WITH 0.40 mm. 3. TOLERANCES WILL BE AS PER, IS:3965-1981 UNLESS OTHERWISE SPECIFIED		SCALE		2:1
		AREA mm^2		236.988
		PERIMETER mm.		242.581
		WEIGHT kg/m		0.640
PARTY'S NAME	FALANX FLOOR SOLUTIONS PVT. LTD., BANGALORE	DRAWING No.		SECTION No.
PARTY'S DRAWING No.	AS PER AutoCAD DRAWING & REQUIREMENT	P-15921-2		–
ALLOY & TEMPER	HE9 WP	X2020		X2020
		38639		38639
DESCRIPTION	ARCHITECTURAL SECTION			