P–16223
X2075
38662

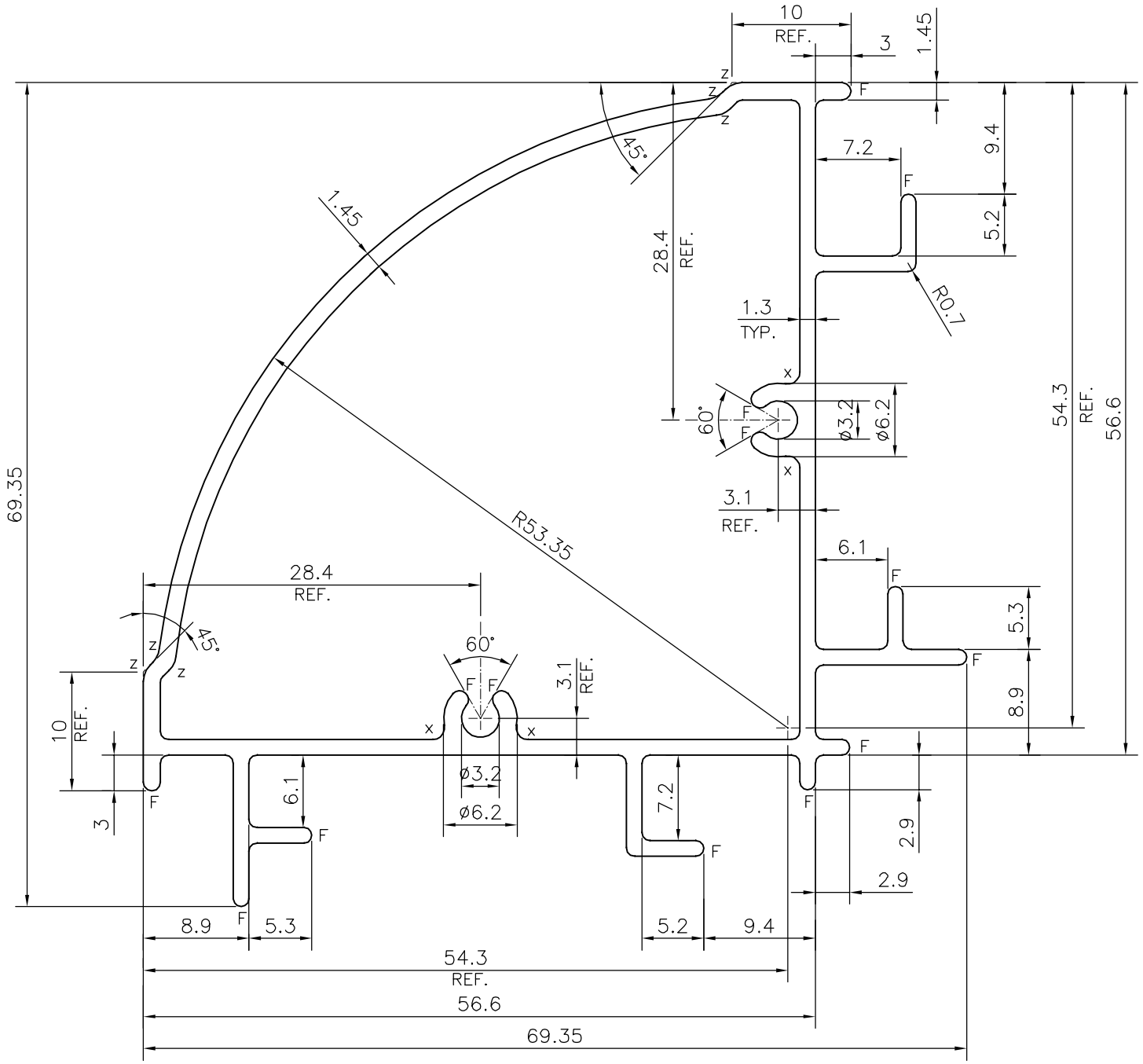

Z = RADIUS 2 mm. (6 PLACES)
X = RADIUS 1 mm. (4 PLACES)
F = FULL RADIUS (14 PLACES)

UNSPECIFIED CORNERS RADIUS WILL BE 0.70 mm.

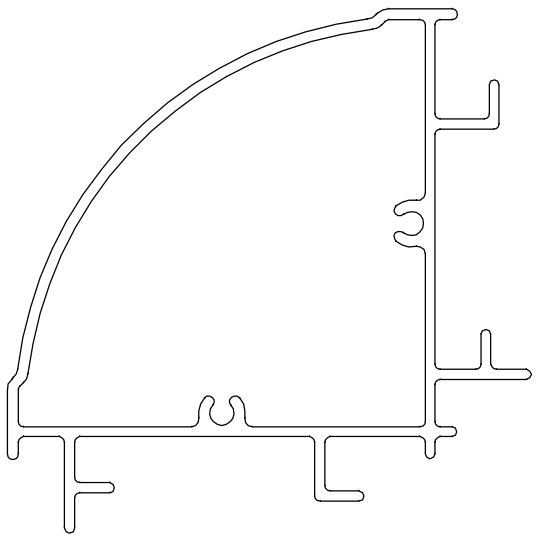

SCALE:– 1:1

TOLERANCES ON OVERALL WIDTHS & WIDTHS ACROSS FLATS OF BARS, & REGULAR SECTIONS			
UPTO 6.40mm – ±0.20 UPTO 10.0mm – ±0.23 UPTO 12.0mm – ±0.25 UPTO 16.0mm – ±0.28 UPTO 25.0mm – ±0.30	UPTO 32.0mm – ±0.38 UPTO 50.0mm – ±0.46 UPTO 60.0mm – ±0.53 UPTO 80.0mm – ±0.69 UPTO 100.0mm – ±0.75	UPTO 120.0mm – ±0.85 UPTO 160.0mm – ±1.02 UPTO 200.0mm – ±1.14 UPTO 250.0mm – ±1.40 UPTO 300.0mm – ±1.65	1. STRAIGHTNESS=1.7mm/M 2. TWIST=1.7mm/M 3. ANGULARITY= ±2° 4. FLATNESS =0.007xWIDTH

JINDAL
SYMBOL OF QUALITY
AN ISO 9001 COMPANY

JINDAL ALUMINIUM LTD.
BANGALORE–560073 (INDIA)

	NAME	DATE
DRAWN	*PARVESH*	17–08–2016
CHECKED		
APPROVED	S.S. GARG	20–09–2016

1. ALL DIMENSIONS ARE IN mm.
2. ROUND OFF ALL SHARP CORNERS WITH 0.40 mm.
3. TOLERANCES WILL BE AS PER IS:6477–1983 , UNLESS OTHERWISE SPECIFIED

SCALE	2:1
AREA mm^2	396.979
PERIMETER mm.	340.95
WEIGHT kg/m	1.072

PARTY'S NAME	XINDO WINDOW PVT. LTD., CHENNAI
PARTY'S DRAWING No.	AS PER AUTOCAD DRAWING
ALLOY & TEMPER	HE9 WP
DESCRIPTION	ARCHITECTURAL SECTION

DRAWING No.	SECTION No.
P–16223	–
X2075	X2075
38662	38662