| |
|---|
| P–16154 |
| S5057 |
| 38670 |

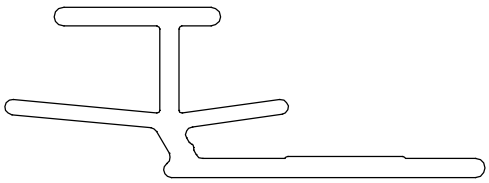

SCALE 1:1

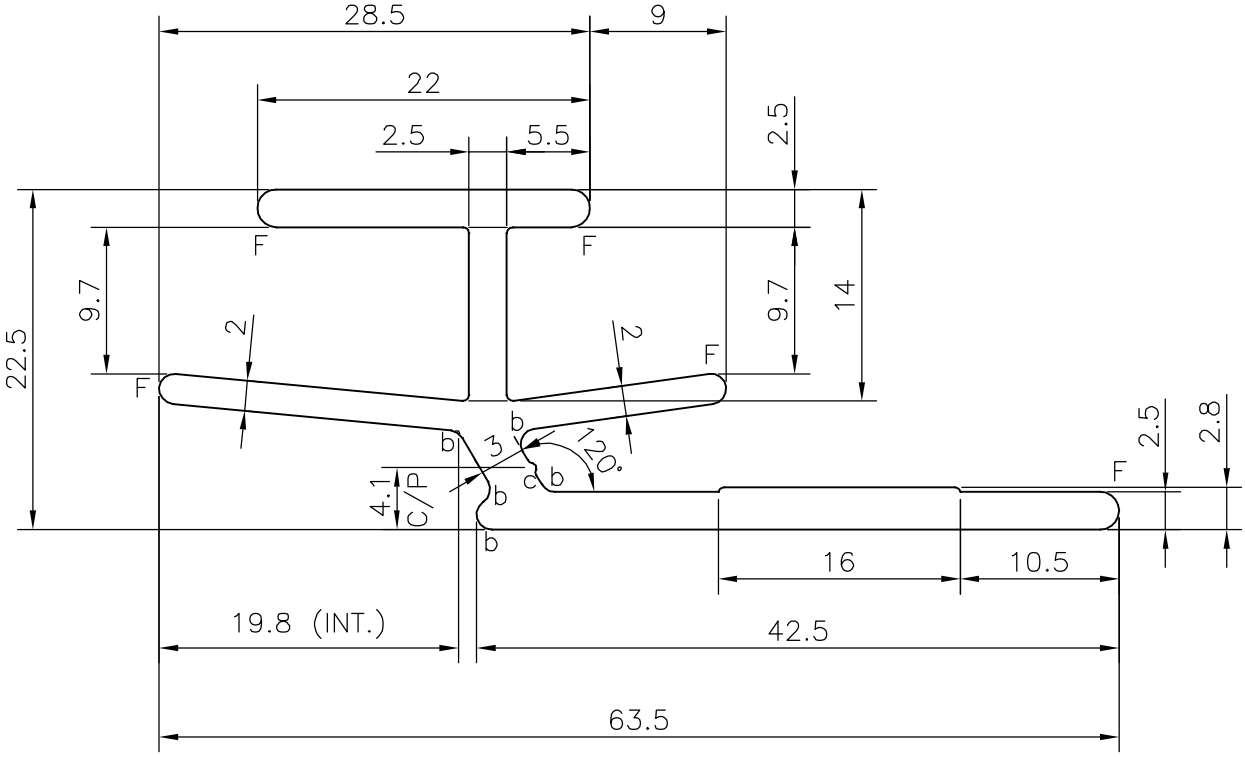


b=RADIUS 1.0 (5 PLACES)
c=0.3 RADIUS
F=FULL RADIUS (5 PLACES)

| | | | | |
|---|---|---|---|---|
| JINDAL<br>SYMBOL OF QUALITY<br>AN ISO 9001 COMPANY | *JINDAL ALUMINIUM LTD.*<br>*BANGALORE–560073 (INDIA)* | | NAME | DATE |
| | | DRAWN | KIRAN | 05–08–2016 |
| | | CHECKED | | |
| | | APPROVED | S.S. GARG | 10–08–2016 |
| 1. ALL DIMENSIONS ARE IN mm.<br>2. ROUND OFF ALL SHARP CORNERS WITH 0.40 mm.<br>3. TOLERANCES WILL BE AS PER IS:3965–1981, UNLESS OTHERWISE SPECIFIED | | SCALE | | 2:1 |
| | | AREA $mm^2$ | | 281.305 |
| | | PERIMETER mm. | | 230.995 |
| PARTY'S NAME | GLASS AND GLAZING TECHNOLOGIES, BANGALORE | WEIGHT kg/m | | 0.759 |
| | | DRAWING No. | | SECTION No. |
| PARTY'S DRAWING No. | AS PER AutoCAD DRAWING | P–16154 | | – |
| | | S5057 | | S5057 |
| ALLOY & TEMPER | HE9 WP | 38670 | | 38670 |
| DESCRIPTION | CLIP SECTION | | | |