P−16633
S5245
38675

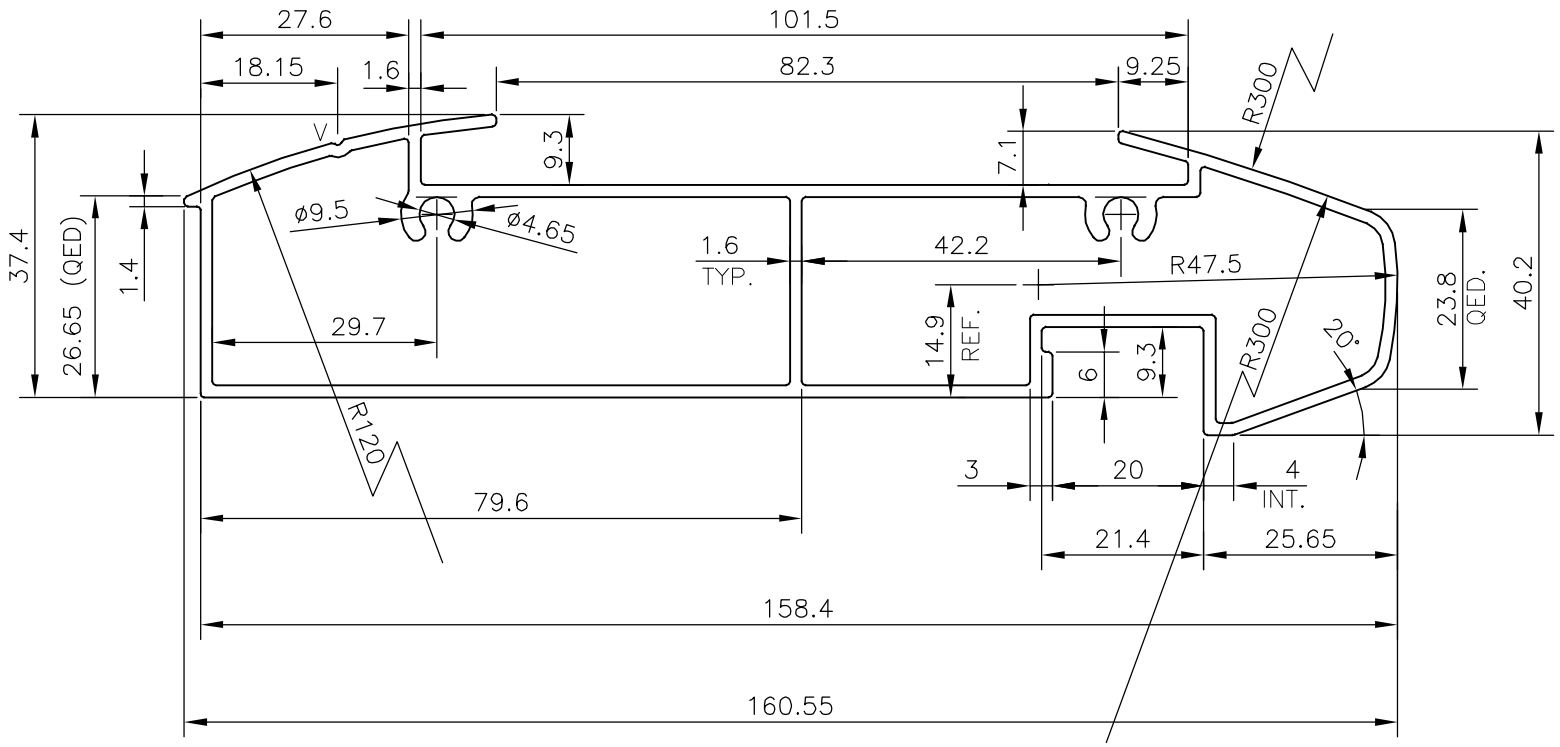

V : VEE GROOVE 0.50 mm (1 PLACES)

TOLERANCES ON OVERALL DIMENSIONS OF HOLLOW SECTIONS			
UPTO 20.0mm − ±0.30 UPTO 30.0mm − ±0.38 UPTO 40.0mm − ±0.45 UPTO 50.0mm − ±0.52 UPTO 60.0mm − ±0.60	UPTO 80.0mm − ±0.70 UPTO 100.0mm − ±0.80 UPTO 120.0mm − ±0.90 UPTO 140.0mm − ±1.00 UPTO 160.0mm − ±1.14	UPTO 180.0mm − ±1.27 UPTO 200.0mm − ±1.40 UPTO 225.0mm − ±1.52	1. STRAIGHTNESS=1.7mm/M 2. TWIST=1.7mm/M 3. ANGULARITY= ±2° 4. FLATNESS =0.006xWIDTH

JINDAL
SYMBOL OF QUALITY
AN ISO 9001 COMPANY

JINDAL ALUMINIUM LTD.
BANGALORE−560073 (INDIA)

1. ALL DIMENSIONS ARE IN mm.
2. ROUND OFF ALL SHARP CORNERS WITH 0.50 mm.
3. TOLERANCES WILL BE AS PER IS:6477−1983 UNLESS OTHERWISE SPECIFIED

		NAME	DATE
DRAWN		KIRAN	23−12−2016
CHECKED			
APPROVED		B.NATARAJ	06−01−2017
SCALE			1:1
AREA mm^2			779.058
PERIMETER mm.			445.113
WEIGHT kg/m			2.103
DRAWING No.		SECTION No.	
P−16633			
S5245		S5245	
38675		38675	

PARTY'S NAME	VELCA RACKING SYSTEMS PVT. LTD., BANGALORE
PARTY'S DRAWING No.	AS PER SAMPLE
ALLOY & TEMPER	6063 T6
DESCRIPTION	MISC. SECTION