IAL–D–7081
38837

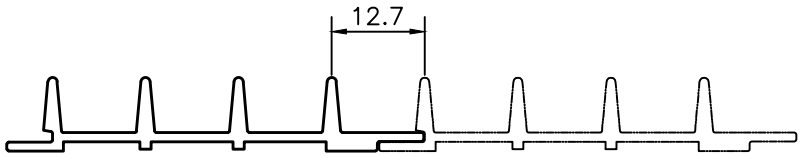

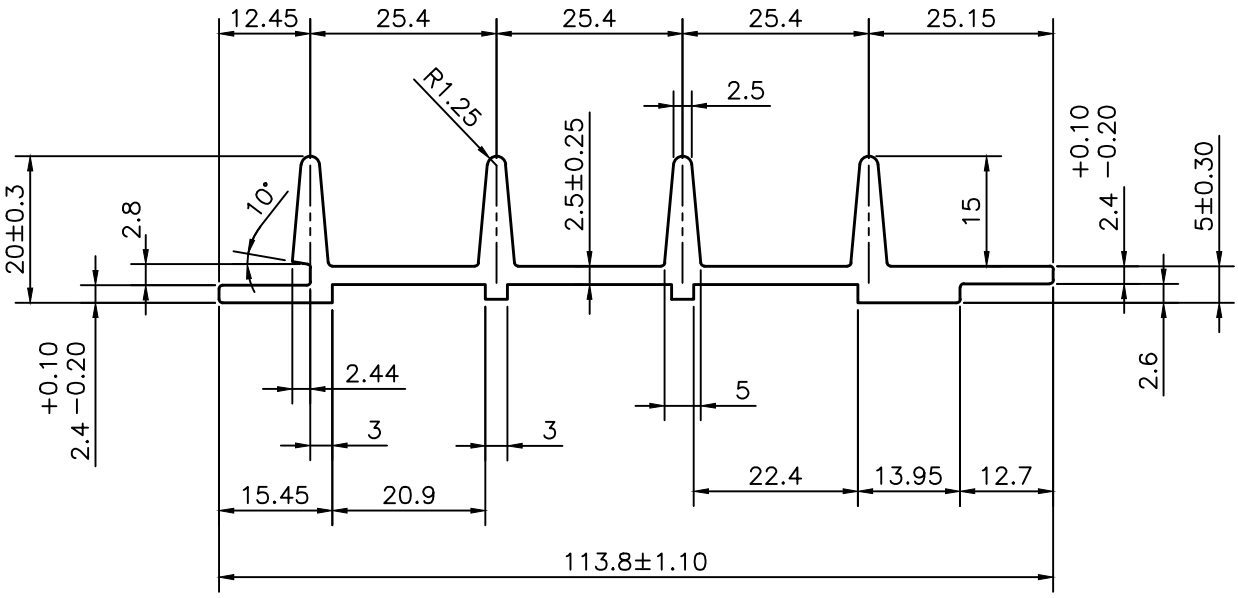

JINDAL SYMBOL OF QUALITY AN ISO 9001 COMPANY	*JINDAL ALUMINIUM LTD.* *BANGALORE–560073 (INDIA)*		NAME	DATE
		DRAWN	*S.K.SHARMA*	27–01–2022
		CHECKED		
		APPROVED		

1. ALL DIMENSIONS ARE IN mm.
2. ROUND OFF ALL SHARP CORNERS WITH 0.40 mm.
3. TOLERANCES WILL BE AS PER BS:EN–755–9 , UNLESS OTHERWISE SPECIFIED

SCALE	1:1
AREA mm^2	551.86
PERIMETER mm.	358.45
WEIGHT kg/m	1.490

PARTY'S NAME	–
PARTY'S DRAWING No.	AS PER DRAWING
ALLOY & TEMPER	–
DESCRIPTION	–

DRAWING No.	SECTION No.
IAL–D–7081	–
38837	38837