IAL-D-7414
38843

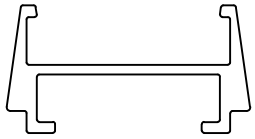

ACTUAL SIZE

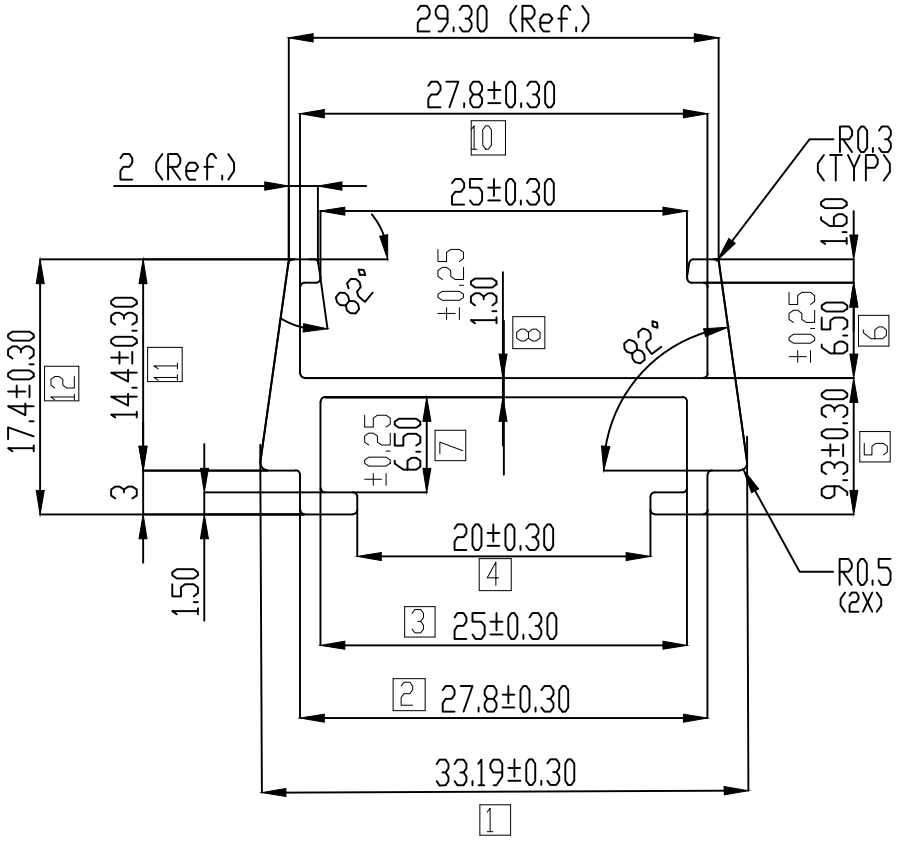

TWIST = 1.70 M.M./MTR.
FLATNESS = ± 0.25 M.M.
STRAIGHTNESS = 1.70 M.M./MTR.
ANGULARITY = ±2°

			NAME	DATE
SYMBOL OF QUALITY AN ISO 9001 COMPANY	*JINDAL ALUMINIUM LTD.* *BANGALORE-560073 (INDIA)*	DRAWN	*PARVESH*	10-12-2021
		CHECKED		
		APPROVED		

1. ALL DIMENSIONS ARE IN mm.
2. ROUND OFF ALL SHARP CORNERS WITH 0.40 mm.
3. TOLERANCES WILL BE AS PER IS:3965-1981 , UNLESS OTHERWISE SPECIFIED

SCALE	1:1
AREA mm^2	120.91
PERIMETER mm.	141.92
WEIGHT kg/m	0.326

PARTY'S NAME	–
PARTY'S DRAWING No.	AS PER DRAWING
ALLOY & TEMPER	63400 WP
DESCRIPTION	ARCHITECTURAL MISC. SECTION

DRAWING No.	SECTION No.
IAL-D-7414	–
38843	38843